User Manual

PhotoniQ Series

MCPC618
8 Channel Photon Counting System

Vertilon Corporation, 66 Tadmuck Road, Westford, MA 01886 / Tel: (978) 692-7070 / Fax: (978) 692-7010 / www.vertilon.com

Disclaimer

Vertilon Corporation has made every attempt to ensure that the information in this document is accurate and complete. Vertilon assumes no liability for errors or for any incidental, consequential, indirect, or special damages including, without limitation, loss of use, loss or alteration of data, delays, lost profits or savings, arising from the use of this document or the product which it accompanies.

Vertilon reserves the right to change this product without prior notice. No responsibility is assumed by Vertilon for any infringements of patents or other rights of third parties which may result from its use. No license is granted by implication or otherwise under the patent and proprietary information rights of Vertilon Corporation.

Copyright Information

© 2012 Vertilon Corporation

ALL RIGHTS RESERVED

Vertilon Corporation, 66 Tadmuck Road, Westford, MA 01886 / Tel: (978) 692-7070 / Fax: (978) 692-7010 / www.vertilon.com

Table of Contents

List of Figures **8**

List of Tables **9**

General Safety Precautions **10**

Product Overview **11**
- Features 11
- Applications 12
- Hardware 12
- Software 13
- Included Components and Software 14

Specifications **15**
- System Specifications 15
- Trigger and Count Period Specifications 16
- Miscellaneous Specifications 17
- Mechanical Specifications 17
- PC System Requirements 17

Typical DNA Sequencer Setup **18**

Theory of Operation **19**
- Counting Channels 19
- Data Acquisition 19
- Pipelined Parallel Processor 19
- Digital Signal Processor 21
- Control and Acquisition Interface Software 22
- Intelligent Triggering and Count Accumulation 22
  - Edge Trigger 23
  - Internal Trigger 23
  - Level Trigger 23
  - Input Trigger 24
  - Pre-Trigger 24
  - Count Period and Count Period Delay 25
  - Boxcar Mode 25
  - Micro Gate (microGate) 25

Hardware Interface **26**

Vertilon Corporation, 66 Tadmuck Road, Westford, MA 01886 / Tel: (978) 692-7070 / Fax: (978) 692-7010 / www.vertilon.com

Control and Acquisition Interface Software 27
Control Area 28
Acquisition 28
Processing 29
Threshold 29
High Voltage 29
MGATE 30
Count 30
Trigger 31
Real Time Display Area 32
Graphical Display 32
Display Limit Adjust 32
Filter Match 32
Out of Range 32
Input Error 32
Trigger Count 32
Trigger End Count 33
Trigger Rate 33
Gate Time 33
Record Count 33
Record Index 33
Trigger/Time Stamp 33
Display 34
Pull Down Menus 35
File 35
System 36
Processing 38
Utilities 39

Data Filtering 41
Band Definition 41
Flag Definition 42
Discriminant Definition 43

Log Files 44
Binary Log File Format 44
Count Record Description 45
Count Record Format 45
Header Word 46
Signal Data 46
Range Bits 46
Trigger / Time Stamp 46
Count Record Length 46
Converting a Binary Log File to Text 47

Vertilon Corporation, 66 Tadmuck Road, Westford, MA 01886 / Tel: (978) 692-7070 / Fax: (978) 692-7010 / www.vertilon.com

Configuration Tables 48
User Configuration Table 48
Custom Configuration Table 53
Factory Configuration Table 53

DLL Function Prototypes 56
Function Prototypes 56
Initialize: 56
Close: 56
ControlInterface: 56
DataInterface: 57
ErrorHandler: 58
LVDLLStatus: 58
Error Cluster Initialization 58
Control Interface Commands 59

Low Level USB Interface Description 61
USB Device Defaults 61
HID Implementation 61
Report Format (IDs 0x01 and 0x11) 62
Report Format (ID 0x22) 63

List of Figures

Figure 1: Model MCPC618 12
Figure 2: Control and Acquisition Software Front Panel 13
Figure 3: Typical DNA Sequencer Setup 18
Figure 4: Functional Block Diagram 20
Figure 5: Pipelined Parallel Processor 20
Figure 6: DSP Functional Block Diagram 21
Figure 7: Intelligent Trigger Module 22
Figure 8: MCPC618 Front Panel 26
Figure 9: Front Panel 27
Figure 10: Data Configuration Dialog Box 36
Figure 11: High Voltage Supply Dialog Box 37
Figure 12: Gain Compensation Dialog Box 38
Figure 13: Log File Converter Dialog Box 39
Figure 14: Select File Dialog Box 40
Figure 15: Band Definition Pane 41
Figure 16: Flag Definition Pane 42
Figure 17: Discriminant Definition Pane 43
Figure 18: Count Record Format 45

List of Tables

Table 1: System Specifications 15
Table 2: Trigger and Count Period Specifications 16
Table 3: Miscellaneous Specifications 17
Table 4: Mechanical Specifications 17
Table 5: Binary Log File (ID Text Header Section) 44
Table 6: Binary Log File (Config Table Section) 44
Table 7: Binary Log File (Data Block Section) 45
Table 8: Data Packet Header Word 46
Table 9: User Configuration Table 52
Table 10: Custom Configuration Table 53
Table 11: Factory Configuration Table 55
Table 12: Control Interface Commands 60
Table 13: USB Device Details 61
Table 14: HID Report Descriptions 61
Table 15: Report Format (IDs 0x01 and 0x11) 62
Table 16: Report Error Codes 62
Table 17: Report Format (ID 0x22) 63

General Safety Precautions

Warning – High Voltages

The PhotoniQ model MCPC618 interfaces to photomultiplier tubes, avalanche photodiodes, and silicon photomultipliers which require potentially harmful high voltages (up to 2000 Volts) during operation. Extreme care should be taken.

Use Proper Power Source

The PhotoniQ model MCPC618 is supplied with a +5V desktop power source. Use with any power source other than the one supplied may result in damage to the product.

Operate Inputs within Specified Range

To avoid electric shock, fire hazard, or damage to the product, do not apply a voltage to any input outside of its specified operating range.

Electrostatic Discharge Sensitive

Electrostatic discharges may result in damage to the MCPC618 or its accessories. Follow typical ESD precautions.

Do Not Operate in Wet or Damp Conditions

To avoid electric shock or damage to the product, do not operate in wet or damp conditions.

Do Not Operate in Explosive Atmosphere

To avoid injury or fire hazard, do not operate in an explosive atmosphere.

Vertilon Corporation, 66 Tadmuck Road, Westford, MA 01886 / Tel: (978) 692-7070 / Fax: (978) 692-7010 / www.vertilon.com

Product Overview

The PhotoniQ model MCPC618 is a complete, off-the-shelf, high speed, eight channel photon counting system for PMTs, silicon photomultipliers (SiPM) and APDs. Implemented as a stand-alone laboratory instrument with a PC interface, the MCPC618 is used for preamplification, discrimination, counting, and data acquisition (DAQ) of single photon events across eight independent counting channels. Its unique front end design permits direct connection to most PMTs without the need for an external preamplifier. Flexible intelligent triggering allows the unit to reliably acquire count data using one of several sophisticated triggering techniques. The MCPC618 is fully configurable through the PC via its USB 2.0 port using an included graphical user interface. Continuous high speed data transfers to the PC are also handled through this port. Additionally, a LabView™ generated DLL is provided for users who wish to write their own applications that interface directly to the unit.

Features

- Includes eight independent counting channels with on-board preamps and discriminators
- Internal or external discriminator threshold control
- Pulse pair resolution of less than 4 nsec.
- Maximum count rate greater than 250 MHz per channel for a total of 2 billion counts per second
- Intelligent triggering supports standard edge, internal, level, and boxcar modes
- Advanced triggering capability supports pre-triggering and input threshold crossing
- Flexible control of counting period parameters such as delay, width, or external boxcar
- Adjustable *micro*Gate provides additional level of count gating at sub-nanosecond time resolution
- Synchronization of *micro*Gate to external excitation source
- Parallel, high speed hardware processor unit performs real-time data filtering and background subtraction
- Programmable data filtering function for real time detection of predefined energy patterns or spectrums
- Trigger stamping and time stamping with 100 nsec resolution
- USB 2.0 interface supports high data transfer rates
- Graphical User Interface (GUI) for menu driven data acquisition and configuration
- LabVIEW™ generated DLL for interface to user custom applications

Vertilon Corporation, 66 Tadmuck Road, Westford, MA 01886 / Tel: (978) 692-7070 / Fax: (978) 692-7010 / www.vertilon.com

Applications

- Fluorescence Spectroscopy
- Fluorescence Lifetime Measurement
- Chemiluminescence Detection
- Bioluminescence Detection
- Photon Correlation Spectroscopy
- Bioaerosol Detection and Discrimination
- DNA Sequencing
- LIDAR
- Particle Sizing
- Optical Tomography of Biological Tissue
- Low Light Level Detection
- Flow Cytometry
- Single Molecule Detection
- Neutrino Detection
- Spatial Radiation Detection
- Confocal Microscopy
- Particle Physics

Hardware

The photo below shows the PhotoniQ model MCPC618.

Figure 1: Model MCPC618

Software

The screen shot below shows the main window of the Graphical User Interface (GUI) software included with the MCPC618. All control, status, and acquisition functions are executed through this interface.

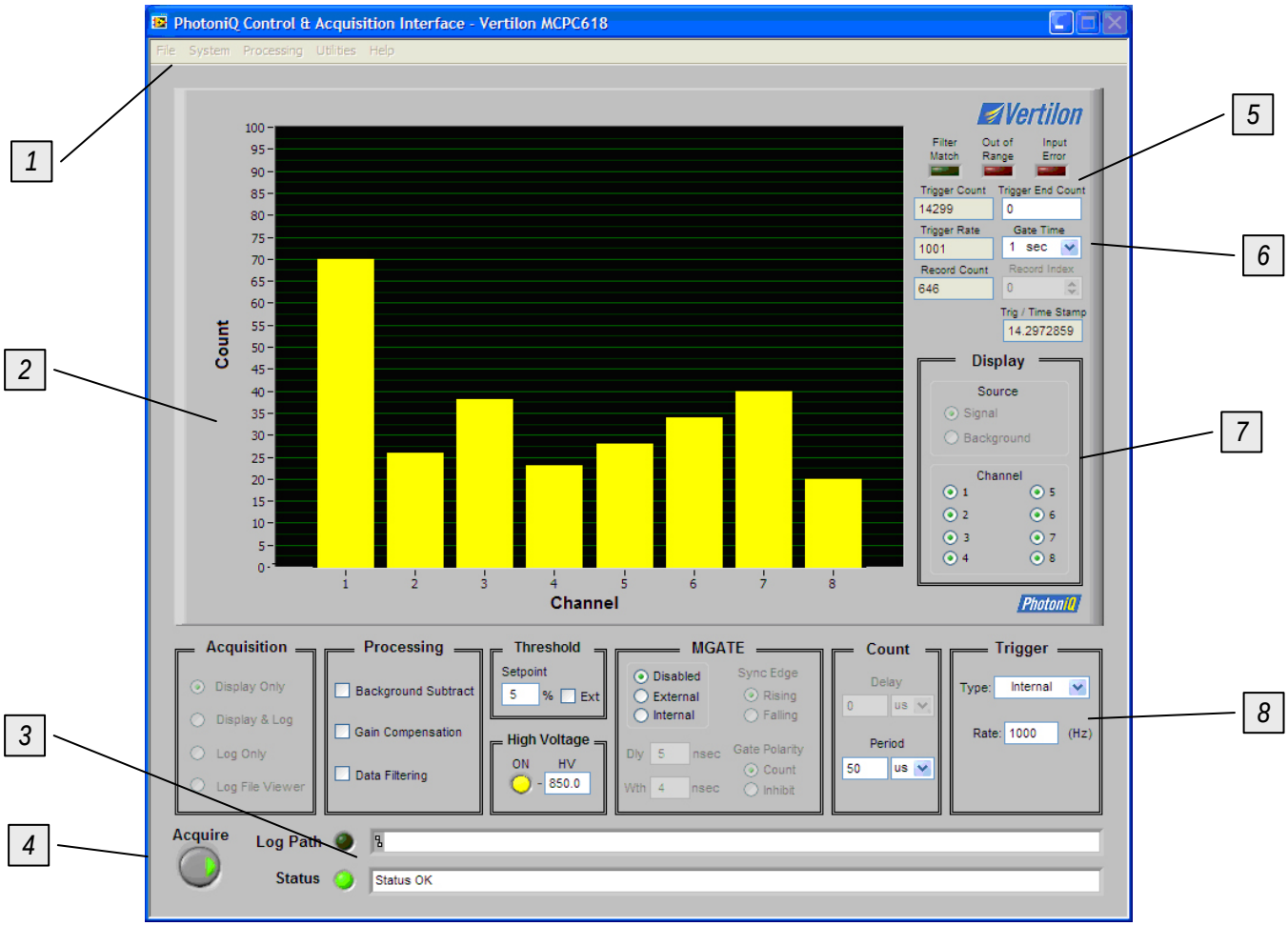

Figure 2: Control and Acquisition Software Front Panel

1. Pull Down Menus
2. Main Display Area
3. Status Bars
4. Acquire Button
5. Status Indicators
6. Counters
7. Display Type
8. Control Section

Vertilon Corporation, 66 Tadmuck Road, Westford, MA 01886 / Tel: (978) 692-7070 / Fax: (978) 692-7010 / www.vertilon.com

Included Components and Software

The PhotoniQ model MCPC618 comes enclosed in a rugged, EMI-shielded, laboratory instrument case and is shipped with the following standard components and software:

- PhotoniQ Control and Acquisition Interface Software CD-ROM
- DC power supply (+5V, 2A) with power cord
- USB 2.0 cable

Vertilon Corporation, 66 Tadmuck Road, Westford, MA 01886 / Tel: (978) 692-7070 / Fax: (978) 692-7010 / www.vertilon.com

Specifications[1]

System Specifications

Item	MCPC618 Specifications
Number of Channels	8
Input Impedance	50 ohm
Input Preamplifier Gain	20 dB
Input Preamplifier Bandwidth	400 MHz
Pulse Pair Resolution (PPR)[2]	4 nsec max.
Minimum Detectable Pulse Amplitude	8 mV
Maximum Count Rate per Channel	250 MHz
Count Period Range	100 nsec to 1 sec
Maximum Count per Count Period	16,383
Maximum Trigger Rate[3]	400 KHz
Sustained Trigger Rate (8 Channels Enabled)	250 KHz
Power Consumption	5 Watts typ.

Table 1: System Specifications

[1] Typical specifications at room temperature.
[2] For 15 mV, 4 nsec FWHM pulse.
[3] Count period of 50 nsec.

Vertilon Corporation, 66 Tadmuck Road, Westford, MA 01886 / Tel: (978) 692-7070 / Fax: (978) 692-7010 / www.vertilon.com

Trigger and Count Period Specifications[1]

Description	Sym	Trigger/Mode	Minimum	Maximum
Trigger to Count Period Delay[2]	t_{td}	Edge	0 nsec	1 msec
Trigger to Count Period Jitter	t_{td}	Edge		± 5 nsec
Pre-Trigger Delay[3]	t_{ptd}	Pre-trigger	$-10T_S$	$+1000T_S$
Pre-Trigger Uncertainty	t_{ptu}	Pre-trigger		T_S
Boxcar Count Period Start Delay	t_{bcd1}	Boxcar	25 nsec	35 nsec
Boxcar Count Period Start Jitter		Boxcar		± 5 nsec
Boxcar Count Period End Delay	t_{bcd2}	Boxcar	25 nsec	35 nsec
Boxcar Width Resolution	t_{bcw}	Boxcar		10 nsec
Count Period	t_{cp}	Edge	100 nsec	1000 msec
		Internal	100 nsec	1000 msec
		Level	100 nsec	1000 msec
		Boxcar	100 nsec	1000 msec
		Input	T_S	$1000T_S$
		Pre-trigger	T_S	$1000T_S$
Count Period Error	t_{cp}	All		±500 psec
Internal Trigger Rate	$1/t_{clk}$	Internal	10 Hz	200 KHz
		Level	10 Hz	200 KHz
Trigger Threshold Range		Input	1 count	16,383 counts
Sample Period	T_S		2.25 usec	2.25 usec
*micro*Gate Delay Adj Range[4]	t_{mgd}	All	5 nsec	127.5 nsec
*micro*Gate Delay Adj Error	t_{mgd}	All	-2 nsec	+2 nsec
*micro*Gate Delay Adj Resolution	t_{mgd}	All		500 psec
*micro*Gate Width Adj Range	t_{mgpw}	All	4 nsec	127.5 nsec
*micro*Gate Width Adj Error	t_{mgpw}	All	-2 nsec	+2 nsec
*micro*Gate Width Adj Resolution	t_{mgpw}	All		500 psec

Table 2: Trigger and Count Period Specifications

[1] Typical specifications at room temperature.
[2] A fixed delay of approximately 25 nsec is in addition to the delay setting.
[3] Relative to system sample period, T_S. A negative value for the delay corresponds to a pre-trigger condition.
[4] A fixed delay of approximately 20 nsec is in addition to the delay setting.

Vertilon Corporation, 66 Tadmuck Road, Westford, MA 01886 / Tel: (978) 692-7070 / Fax: (978) 692-7010 / www.vertilon.com

Miscellaneous Specifications

Description	Sym	Minimum	Maximum
Trigger Input Voltage Range	TRIG IN	0 V	+3.3V, +5.0 V max.
Trigger Input Logic Low Threshold	TRIG IN		+0.8 V
Trigger Input Logic High Threshold	TRIG IN	+2.0 V	
Trigger Input, Input Impedance	TRIG IN	10 Kohm	
Trigger Input, Transition Time	TRIG IN		20 nsec
Trigger Input, Positive Pulse Width	TRIG IN	100 nsec	
Trigger Input, Negative Pulse Width	TRIG IN	100 nsec	
Trigger Output Voltage Range	TRIG OUT	0 V	+3.3 V
*micro*Gate Input Voltage Range	GATE IN	0 V	+3.3 V, +5.0 V max.
*micro*Gate Input Logic Low Threshold	GATE IN		+0.8 V
*micro*Gate Input Logic High Threshold	GATE IN	+2.0 V	
*micro*Gate Input, Input Impedance	GATE IN	50 ohm	
*micro*Gate Input, Transition Time	GATE IN		20 nsec
*micro*Gate Input, Positive Pulse Width	GATE IN	10 nsec	
*micro*Gate Input, Negative Pulse Width	GATE IN	10 nsec	
*micro*Gate Output Voltage Range	GATE OUT	0 V	+5.0 V
External Threshold Input Voltage Range	THRESHOLD	0 V	+5.0 V
External Threshold Gain	THRESHOLD	20 mV per V	
External Threshold Input Impedance	THRESHOLD	500 Kohm	
Trigger Stamp Counter Range		0	2^{32}-1
Time Stamp Counter Range		0	2^{32}-1
Time Stamp Resolution (Decade Steps)		100 nsec	1 msec
Time Stamp Maximum (Decade Steps)		429.4967 sec	49.71026 days
Trigger Counter Range		0	10^8

Table 3: Miscellaneous Specifications

Mechanical Specifications

Description	Specification
Width	9.843 in. (250 mm)
Height	3.346 in. (85 mm)
Depth	10.236 in. (260 mm)

Table 4: Mechanical Specifications

PC System Requirements

- Microsoft Windows XP operating system
- Intel USB 2.0 high-speed host controller with 82801Dx chipset (low speed is not supported)
- Run-time engine for LabView™ version 9.0 for use with DLLs

Typical DNA Sequencer Setup

DNA sequencing applications require the use of four or more photomultiplier tubes to detect the fluorescence from DNA fragments labeled with fluorescent dyes — each dye indicating the presence of a DNA fragment with one of the four DNA bases (T, A, G, C). A typical setup using a PhotoniQ MCPC618, four photomultiplier tubes, optics, a laser, and a microcapillary electrophoresis array containing the DNA fragments is shown below. The PMTs are positioned with the optics to detect the fluorescence from the DNA fragments labeled with the individual dye markers. Each PMT connects to a photon counting input on the MCPC618 multichannel photon counting system. The system is triggered to coincide with the firing of the excitation laser and each resulting record generated by the MCPC618 consists of the photon counts for the four PMTs accumulated during the user-programmed count period. The count data from the unit is sent to a PC over a USB 2.0 connection for display, logging, or real time processing.

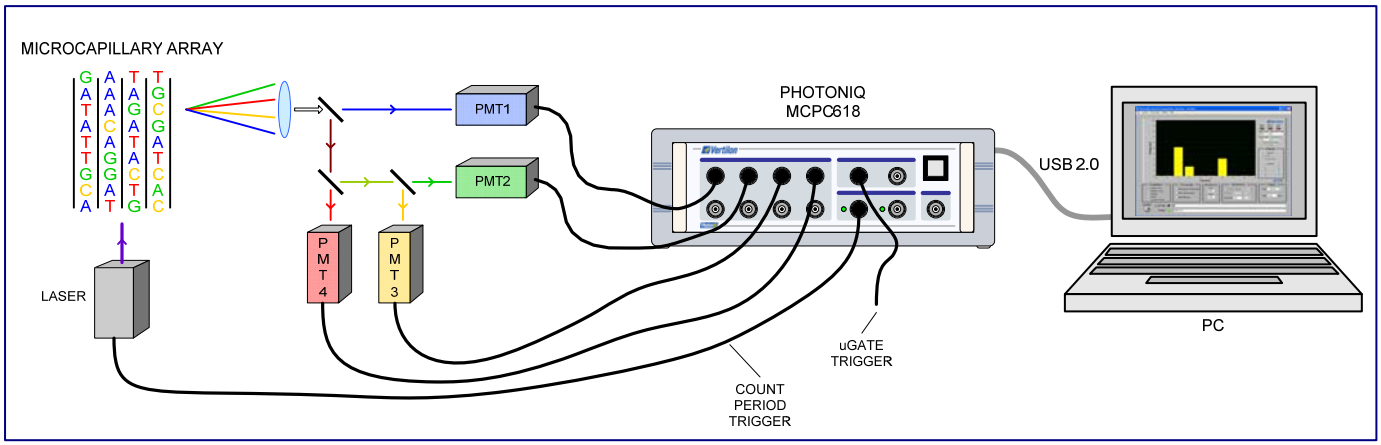

Figure 3: Typical DNA Sequencer Setup

Vertilon Corporation, 66 Tadmuck Road, Westford, MA 01886 / Tel: (978) 692-7070 / Fax: (978) 692-7010 / www.vertilon.com

Theory of Operation

The functional block diagram for the PhotoniQ MCPC618 shown in Figure 4 is made up of eight counting channels each consisting of an ultra-high bandwidth preamplifier, precision discriminator, and high speed count accumulator. The counting channels are configured and triggered together but operate independently. The intelligent trigger/ acquisition module loads the triggering and acquisition parameters for the eight channels so that any one of multiple triggering modes can be used to control the count period and initiate the data acquisition process. At the end of the count period, eight parallel digital data channels are output to the Pipelined Parallel Processor (P3) where it performs real time data filtering, buffering and channel uniformity correction. The resulting data is sent to the DSP where it is packetized and sent to the USB output port. Additional reserved DSP processing power can be used to implement user defined filter, trigger, and data discrimination functions.

Counting Channels

The front end preamp in each counting channel provides low noise, high gain for the narrow pulses typically produced by photon counting photomultiplier tubes. Its robust design and stable operation allows the MCPC618's inputs to connect directly to a PMT's anode using any reasonable length of 50 ohm cable. This avoids having to locate preamps close to the PMTs and having to deal with the associated power and control issues. The gain of the preamps is preset such that the signal from a single photon results in an output optimized for the input range of the discriminator. The discriminator threshold control voltage (V_{th}) in combination with the PMT's high voltage cathode bias are used to set the ideal discrimination point for detecting single photons from the PMT. Detected photons are counted by the high speed accumulator during the count period. Additionally, a programmable *micro*Gate function provides another level of gating so that counting can be selectively enabled or disabled synchronously with an external gating trigger signal. Unlike the count period which is setup and controlled by the intelligent trigger module, this gate operates and is controlled with sub-nanosecond resolution. The *micro*Gate is usually synchronized with an external excitation source like a laser so that counting can be disabled for the short period of time while the source is active.

Data Acquisition

Data acquisition is initiated by a trigger signal (either internal or external) detected by the MCPC618's intelligent trigger module. Each trigger initiates a count period which starts the accumulation of the photon count signals across all channels. The parallel architecture of the counting channel circuitry allows count accumulation to take place simultaneously across all channels thus achieving very high effective count rates. At the end of the count period the data is transferred to the Pipelined Parallel Processor, through the DSP, and over the USB port. Each trigger results in a count record being generated that contains the individual counts for each channel over the count period. Additional data such as time stamping is also included in the data record.

Pipelined Parallel Processor

The P3 Pipelined Parallel Processor shown on the next page is a dedicated high speed hardware processing unit that executes 8 parallel channels of computations on the 8 data streams from the front-end counting channels. Each channel processor performs real-time data filtering, buffering, and channel uniformity correction. The outputs from the 8 channel processors are sent to the frame post processor where additional frame-formatted data manipulation is performed. The frame post processor output is sent to the Parallel Peripheral Interface (PPI) where it is formatted and transferred to the DSP for further processing.

Figure 4: Functional Block Diagram

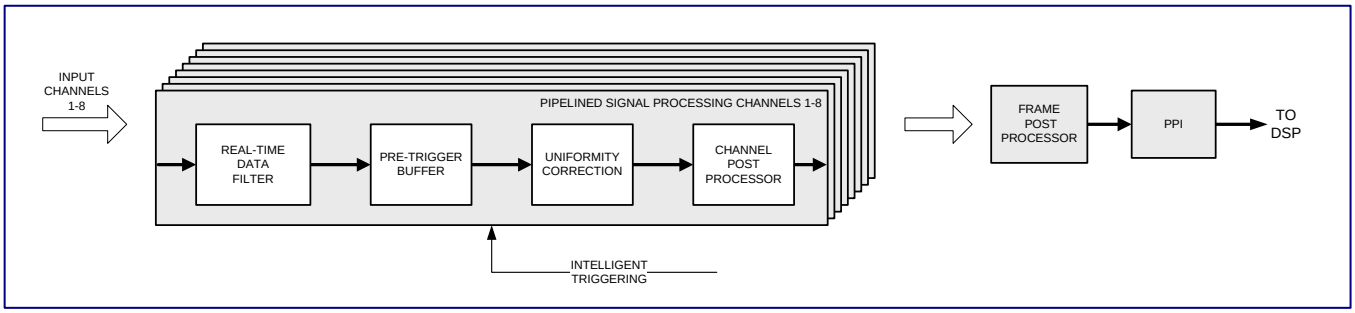

Figure 5: Pipelined Parallel Processor

Vertilon Corporation, 66 Tadmuck Road, Westford, MA 01886 / Tel: (978) 692-7070 / Fax: (978) 692-7010 / www.vertilon.com

Digital Signal Processor

The 16 bit fixed point digital signal processor performs the high level data manipulation and system control in the MCPC618. Data received from the P3 on the PPI is routed through the DSP and buffered using the on-board SDRAM. This architecture allows the unit to capture very large frames of data with little or no loss of data. Once the data is stored, it is packetized by the USB packet generator and sent out to the PC through the USB 2.0 port. Extra computational power is reserved in the DSP so that user-defined algorithms can be executed on the data prior to transmission. This has the benefit that routines that were previously performed off-line by the PC can instead be handled in real-time. The net effect is that the downstream data load to the PC is reduced so that throughput can be increased by orders of magnitude.

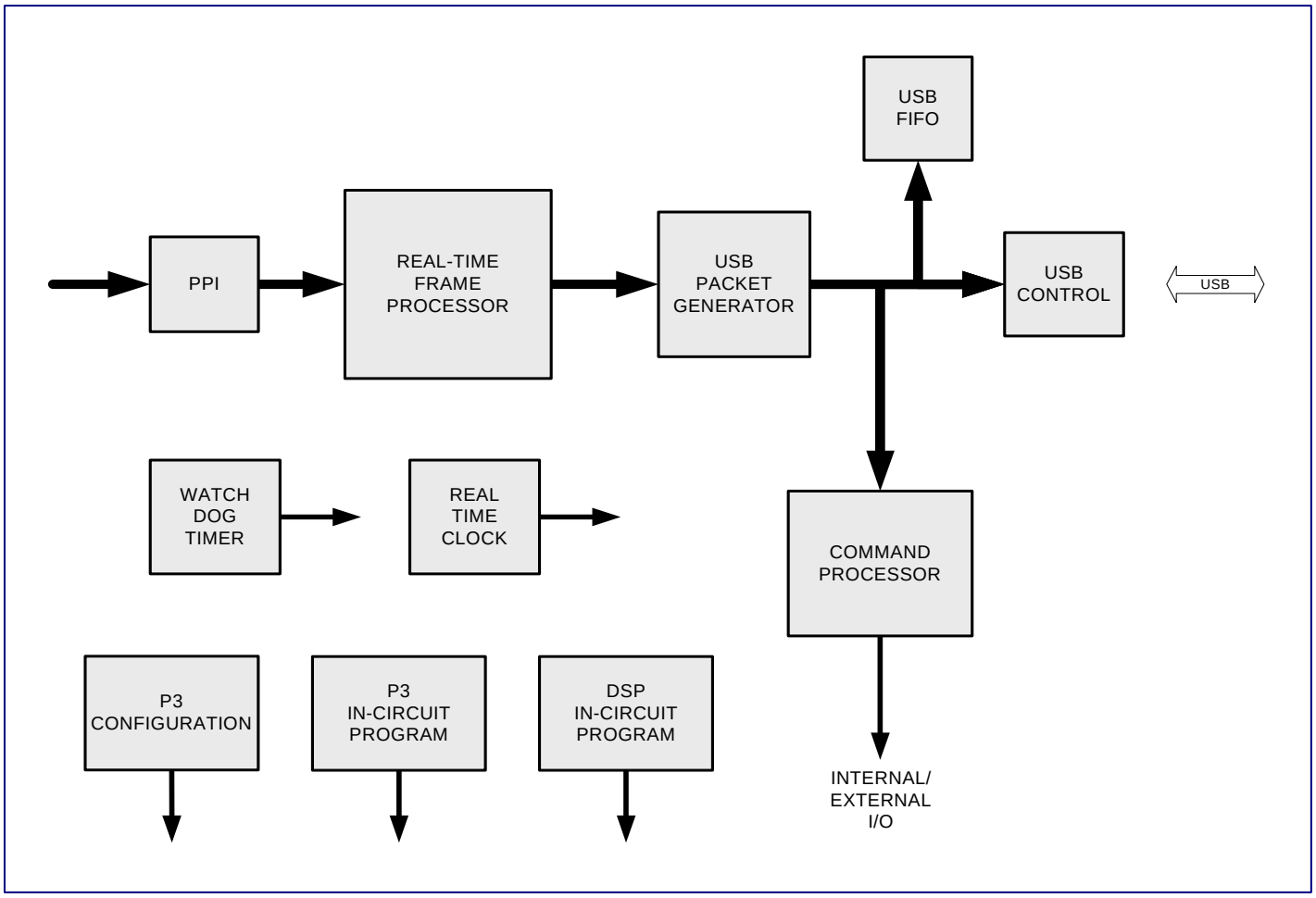

Figure 6: DSP Functional Block Diagram

Control and Acquisition Interface Software

The MCPC618 is programmed and monitored by the Control and Acquisition Interface Software. This software, which is resident on the PC, provides a convenient GUI to configure and monitor the operation of the unit. Configuration data used to control various functions and variables within the MCPC618 such as trigger and acquisition modes, count period, processing functions, etc. is input through this interface. For custom user applications, the GUI is bypassed and control and acquisition is handled by the user's software that calls the DLL supplied with the unit. As configuration data is modified, the MCPC618's local, volatile RAM memory is updated with new configuration data. The hardware operates based upon the configuration data stored in its local RAM memory. If power is removed from the MCPC618, the configuration data must be reprogrammed through the GUI. However, a configuration can be saved within the non-volatile flash memory of the unit. At power-up, the hardware loads configuration data from its flash memory into its volatile RAM memory. Alternatively, the RAM memory can be configured from a file on the user's PC.

Intelligent Triggering and Count Accumulation

One of the most powerful features of the MCPC618 is the wide variety of ways the count process can be triggered and controlled. The unit consists of an intelligent trigger module with the capability to trigger the input channels in the conventional external or internal post-trigger modes. As an added feature, advanced on-board signal processing techniques permit more sophisticated triggering modes such as pre-trigger, which captures counts that occur prior to the trigger signal, and input trigger, which captures counts based on a threshold criteria. The descriptions below illustrate some of the advanced trigger and count capabilities of the MCPC618.

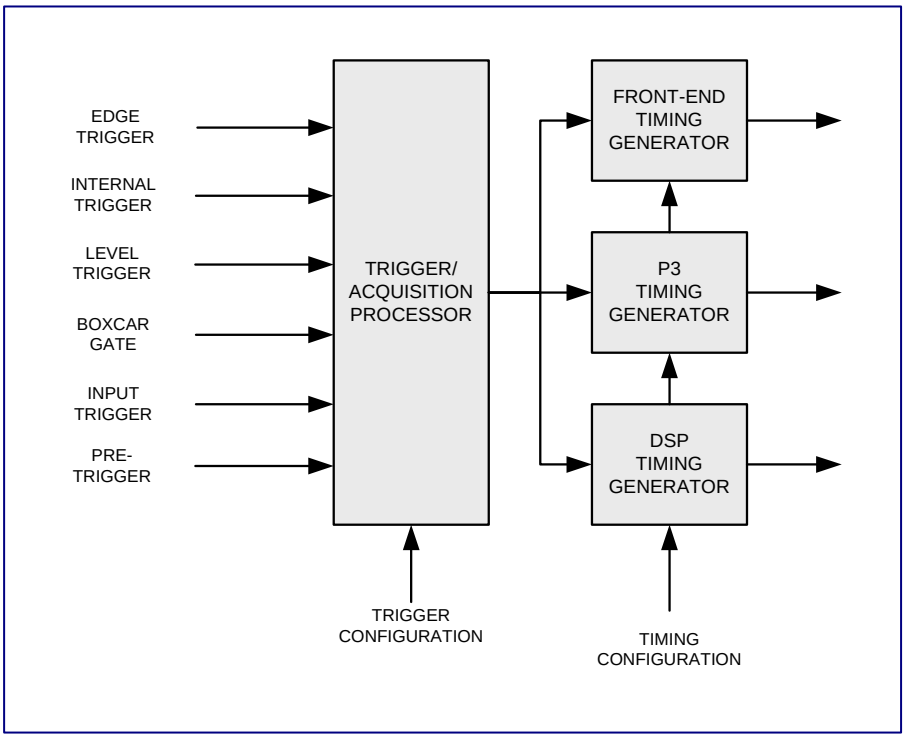

Figure 7: Intelligent Trigger Module

Vertilon Corporation, 66 Tadmuck Road, Westford, MA 01886 / Tel: (978) 692-7070 / Fax: (978) 692-7010 / www.vertilon.com

Edge Trigger

Edge trigger is a simple trigger mode whereby an externally-supplied positive signal edge to the intelligent trigger module starts the counting process. As shown in the figure at right, the rising edge of the trigger initiates the start of the count period, t_{cp}. At the end of the count period, a single record of data is created that contains the total counts for each input channel configured. The count interval parameters of delay to start (t_{td}) and count period (t_{cp}) are programmable over a large range of values with very fine resolution.

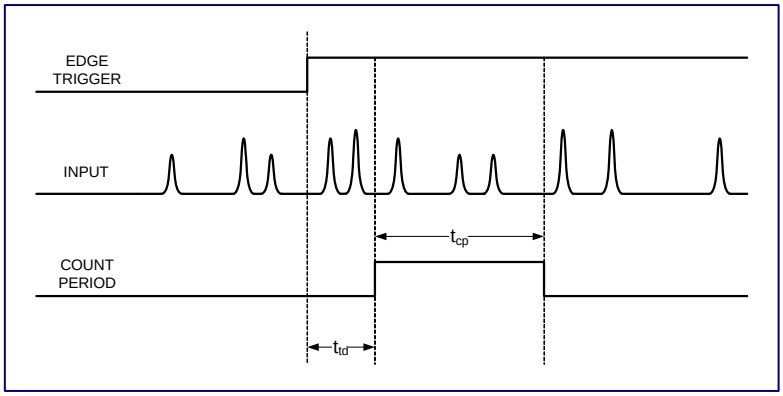

Internal Trigger

Continuous data acquisition is possible by operating the unit in internal trigger mode. Here a programmable internal free running clock (t_{clk}) replaces the external trigger signal. Count data is accumulated during the count period which occurs synchronously with each edge of the clock signal. One data record containing the counts for all configured channels is generated per clock. This mode is particularly useful when large count periods are needed for collection and analysis, but no trigger signal is available.

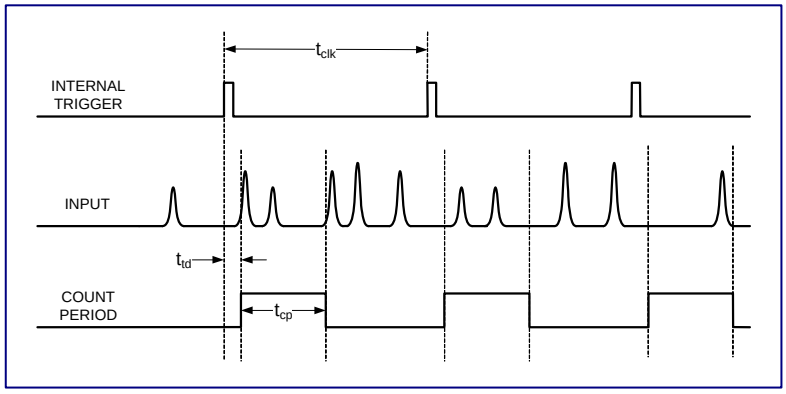

Level Trigger

This trigger mode is similar to internal triggering except that an externally provided positive level-sensitive trigger gate controls the counting. The actual trigger signal is internally generated but synchronized and gated by the external trigger gate. A logic high enables the acquisition of data by allowing the internal trigger to generate the pre-programmed count period (t_{cp}). A logic low on the trigger gate blocks the internal trigger from generating the count period so that no further count records are generated.

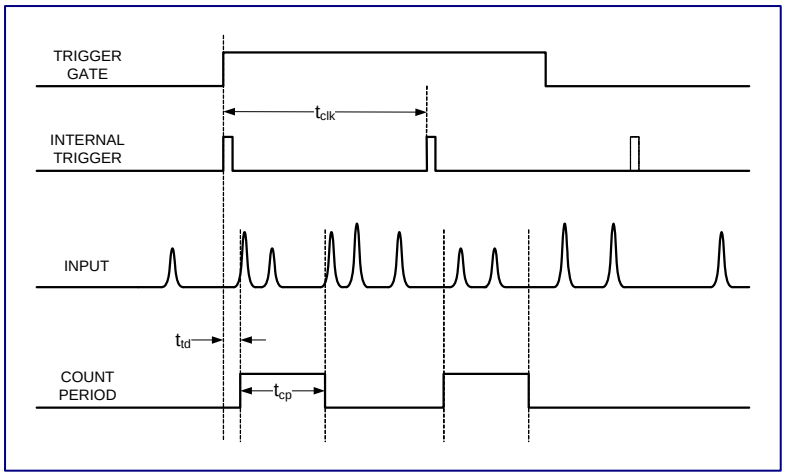

Input Trigger

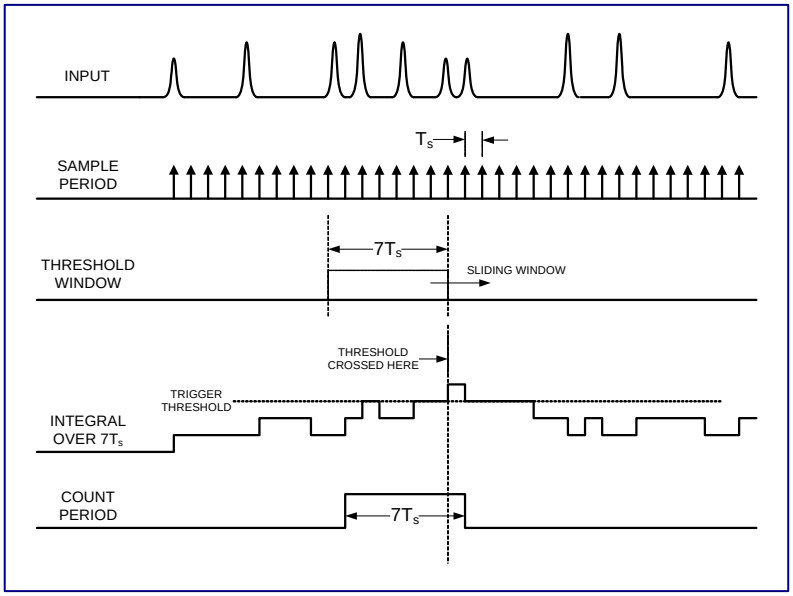

Input trigger is used to trigger the count process when incoming data on a specific channel exceeds a user defined threshold. No external trigger signal is required. The count period determines the time over which the input signal is accumulated and is typically set to closely match the expected period over which the desired counts are to be measured. The figure at right shows a timing diagram for input triggering. When using this mode, the count period must always be a multiple of the sample period, T_S. The count total during the sliding threshold window (which is always equal to the count period) is compared to the trigger threshold level. In the example, the threshold equals three counts, the count period equals $7T_S$ and thus only at one point does the count total over the $7T_S$ count period exceed the three count threshold. The crossing of the threshold triggers the MCPC618 to acquire data across all channels and generate a data record. To better position the count period around the desired count activity, the actual accumulation window can be shifted by an integer number of T_S intervals (positive delay only) relative to when the threshold was crossed. In the example below, the count period shift is one T_S interval.

Pre-Trigger

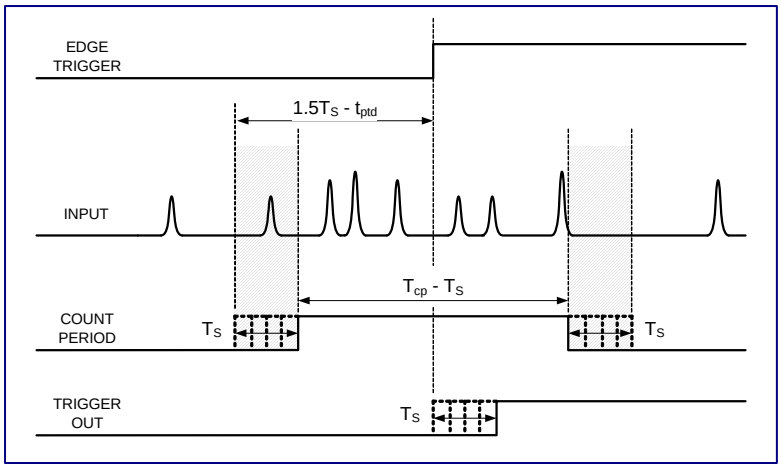

In pre-trigger mode, an external positive-edge trigger signal is used to acquire count data that occurred prior to the trigger's arrival. As shown below, the programmable pre-trigger delay (t_{ptd}) is used to set the start of the programmable count period (T_{cp}) at a time prior to the trigger edge. The pre-trigger uncertainty time (t_{ptu}), shown as the dashed area in the figure, is equal to sampling period of the system, T_S. While the start of the count period is uncertain by time T_S, the actual duration of the count period itself is quite accurate. Both the pre-trigger delay and the count period are constrained to be multiples of the system's sampling period. The trigger output signal is a reference signal that can be used to setup the system. Regardless of the pre-trigger delay time, the leading edge of the trigger out always occurs between 0 and T_S from the leading edge of the trigger input signal. The period of the trigger out is precisely equal to the count period. When the pre-trigger delay is set to one (positive) T_S, the start of the count period precedes the rising edge of the trigger output by one half of sample period, T_S. For other pre-trigger delay times (either positive or negative), the actual count period is shifted accordingly.

Vertilon Corporation, 66 Tadmuck Road, Westford, MA 01886 / Tel: (978) 692-7070 / Fax: (978) 692-7010 / www.vertilon.com

Count Period and Count Period Delay

The count period is the time duration over which the input counts are accumulated. The count period delay is the parameter that sets the start of the count period relative to the rising edge of the trigger. Only for pre-triggering can this value be negative. Both count period parameters are adjustable.

Boxcar Mode

Boxcar mode utilizes the input trigger signal to set the two count period parameters. The preset values are ignored. As shown in the figure, the trigger signal is used to define the period over which the counts are to be accumulated. Aside from a small amount of fixed positive delay (times t_{bcd1} and t_{bcd2}), the boxcar formed by the trigger signal is the count period (t_{bcw}) and any counts that occur when the boxcar is inactive are not accumulated and therefore effectively masked out.

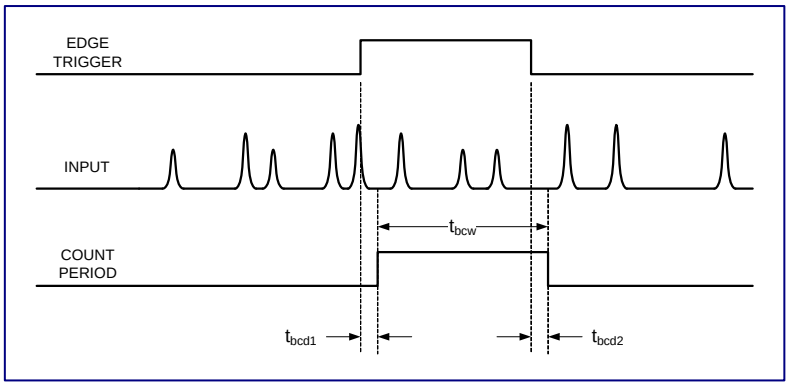

Micro Gate (microGate)

The micro gate (*micro*Gate) provides an additional level of control over the photon count period. Although this function is technically not part of the intelligent triggering module, it is closely related and in fact can be used with any of the intelligent triggering modes. The example at right shows the simplest case where the *micro*Gate is used with edge trigger mode. The excitation trigger is an external signal that may, for example, be used to drive an excitation source like a laser. When fired, a large amount of unwanted signal is generated that should be excluded from the count total. This is shown in the figure as five closely spaced pulses immediately following the excitation trigger. Without the *micro*Gate the count total would be nine counts over the count period. Because the unwanted energy occurs over a very short time — on the order of nanoseconds — control over the exact position of the count period using the edge trigger signal would be too imprecise and likely result in the exclusion of some desired counts. Using the *micro*Gate, which by its design ties directly to the count accumulator in the front end counting channels, the counting process can be momentarily stopped so that the unwanted pulses can effectively be excluded from the count total. This is done by using the excitation trigger as the input to the *micro*Gate generator. The result is just four counts when using the *micro*Gate. The MCPC618 gives the user full control over the *micro*Gate. The gate width (t_{mgpw}) and delay from trigger (t_{mgd}) as well as the trigger edge polarity and gate polarity are easily configured in the user interface.

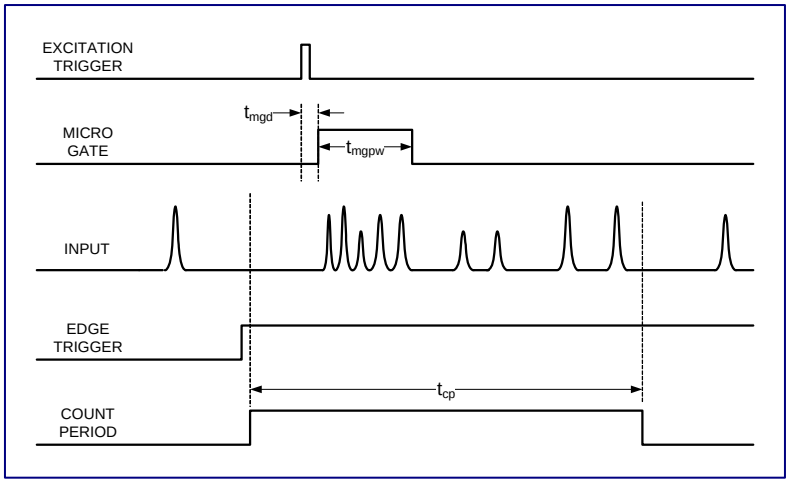

Vertilon Corporation, 66 Tadmuck Road, Westford, MA 01886 / Tel: (978) 692-7070 / Fax: (978) 692-7010 / www.vertilon.com

Hardware Interface

The photo below shows the front panel connectors and status indicators on the PhotoniQ MCPC618.

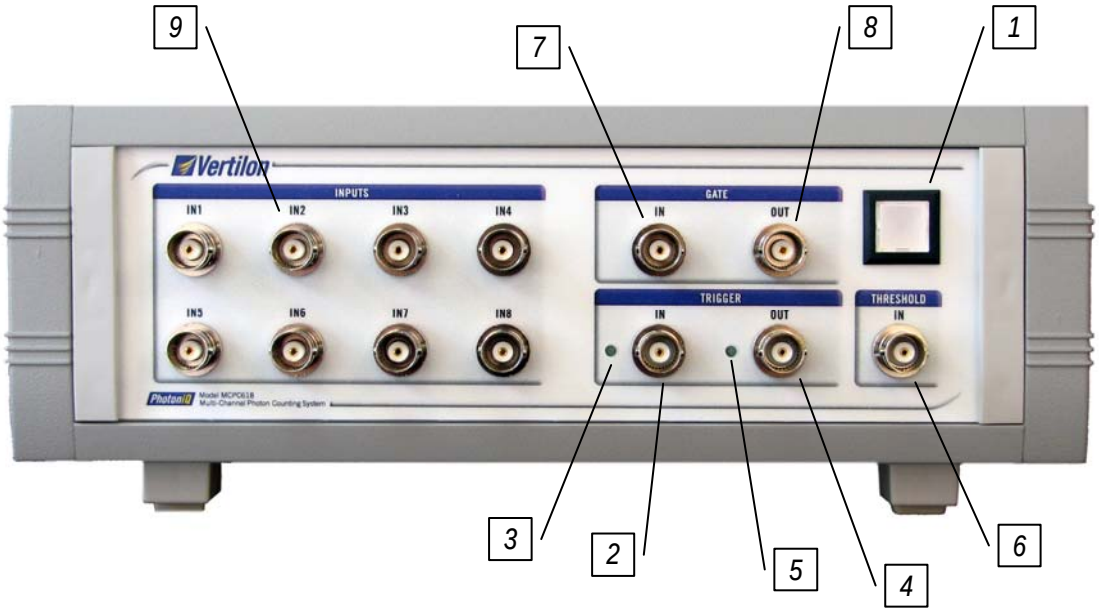

Figure 8: MCPC618 Front Panel

1. Main Power Switch: Lighted main power switch.
2. Trigger Input (BNC): Main trigger input. A positive edge on this input initiates the count period which when complete generates a record of count data for all channels.
3. Trigger Indicator (Green LED): Indicates when a trigger is supplied to the unit on the Trigger Input connector.
4. Trigger Output (BNC): Main trigger output. When in edge, level, or internal trigger mode, the output from this connector is the actual count period used by the MCPC618 to accumulate photon counts on its inputs. In input trigger or pre-trigger modes, the trigger output indicates the trigger point shifted by the programmable delay time.
5. Acquisition Indicator (Green LED): Indicates when a count record is generated by the unit.
6. Threshold Input (BNC): Analog voltage input used to indirectly control the threshold to the discriminators. Bypassed when using the internal threshold generator.
7. *micro*Gate Input (BNC): The trigger input to the *micro*Gate generator.
8. *micro*Gate Output (BNC): Output from the *micro*Gate generator used to align gating with input signals.
9. Input Channels (BNC): Photon counting input channels, total of eight.

Vertilon Corporation, 66 Tadmuck Road, Westford, MA 01886 / Tel: (978) 692-7070 / Fax: (978) 692-7010 / www.vertilon.com

Control and Acquisition Interface Software

Running *ControlInterface.exe* will open the main window (front panel) of the Control and Acquisition Interface Software. The front panel is generally used for display and control of the data acquisition process and reporting of the system's operational status. Various pull-down menus are used for setting the configuration of the MCPC618 and for performing diagnostic routines.

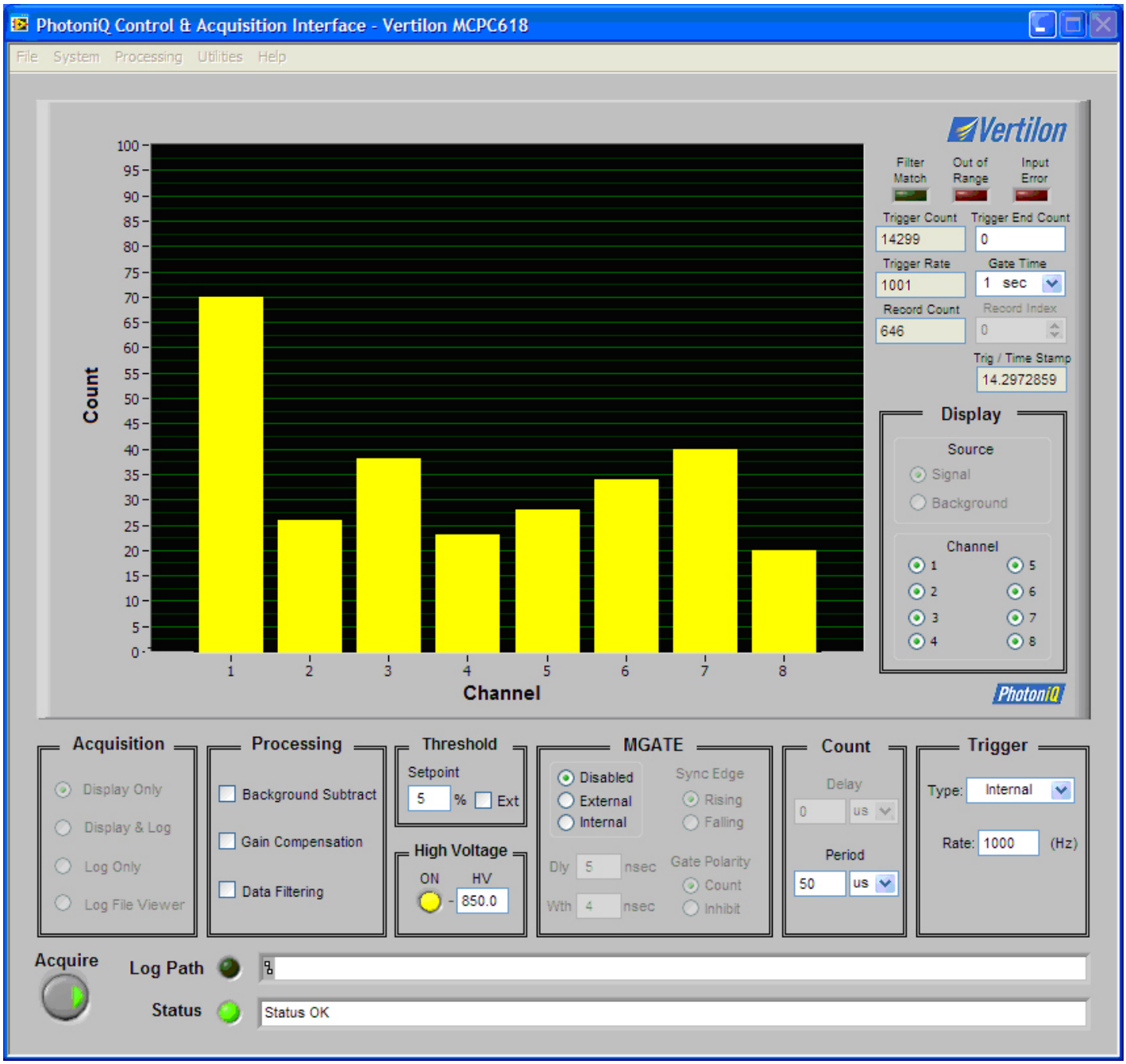

Figure 9: Front Panel

Control Area

This area allows the user to define the acquisition, triggering, and count period parameters and to control system settings.

Acquisition

The Control and Acquisition Interface Software supports three types of acquisition modes for real time display and/or logging of count data from the MCPC618 hardware. A fourth acquisition mode allows the user to view a logged file in the display area.

Display Only
This mode is intended for use in setting up the user's system when the real time impact of modifications is needed, such as during optical alignment, detector bias selection, or discriminator threshold adjust. Most of the front panel functions are accessible. Data is collected from the MCPC618 one record at a time and displayed in the display area in the GUI. Additional triggers are ignored until the display is completely updated. The processing overhead necessary to display the data reduces the maximum rate at which count records can be acquired.

Display & Log
Similar to the *Display Only* mode except that the user is able to log the viewed count records. The display overhead reduces the maximum rate at which records can be logged without a loss of data. Most of the front panel functions are disabled in this mode.

Log Only
In this mode data from the MCPC618 is logged directly to a file. With the exception of the *Record* and *Trigger* counters, the display and front panel functions are disabled so that the maximum achievable logging rate can be attained. Data acquisition is optimized for the collection of continuous triggers. Triggers to the unit are not accepted if the system is busy processing a trigger that was previously accepted. To handle high peak trigger rates, count data is stored in an on-board buffer where it is then logged at a slower speed to the PC. The maximum sustained data acquisition rate will vary depending upon the user's computer system.

Log File View
Allows the user to select a previously logged file for viewing in the display area. Records are stepped through using the record index box.

Acquire (Select File) Button
Toggles between *Acquire* and *Standby* for display and logging acquisition modes. Once a configuration has been set, the user starts acquiring data by toggling this switch to *Acquire*. When the *Log File View* acquisition mode is selected, this button allows the user to select the log file for viewing. Pushing the button opens a dialog box through which a data file can be selected for manual playback.

Log Path
Indicates the location of the data file that has been selected for logging or viewing.

Status Line
Status information and error messages regarding the unit's operation are displayed in this box. The LED to its left side is green under normal operating conditions and turns red when there is an error condition.

Processing

Allows the user to select which processing functions, if any, are applied to the data. The parameters for the individual processing functions are entered into their respective dialog boxes which can be found under the *Processing* pull-down menu.

Background Subtraction
Enables subtraction of a pre-calculated background signal from the total signal.

Gain Compensation
Enables gain compensation of channel to channel non-uniformities. Sometimes used to correct for sensor quantum efficiency differences.

Data Filtering
Enables the data filtering processor which can selectively accept or reject data records depending on a set of user defined conditions.

Threshold

The threshold parameters for the discriminators are set in this area.

Setpoint
A value of 0 to 100% of the threshold adjustment range. This value is usually set experimentally since it depends on the PMT or SiPM gain, and the size and shape of the input pulse.

External
Enables the external threshold adjustment input and bypasses the internal setting.

High Voltage

The high voltage functions are available only if the high voltage bias supply option is installed and activated in the *High Voltage Supply* dialog box found under the *System* pull down menu.

On
Enables high voltage bias supply. This function is available only if high voltage bias supply is enabled under the *High Voltage Supply* dialog box.

HV Setpoint
Sets the output voltage of high voltage bias supply. Cannot exceed upper limit set under the *High Voltage Supply* dialog box.

Vertilon Corporation, 66 Tadmuck Road, Westford, MA 01886 / Tel: (978) 692-7070 / Fax: (978) 692-7010 / www.vertilon.com

MGATE

Controls the operation of the *micro*Gate function. The *micro*Gate is synchronously locked to the user supplied *micro*Gate input on the front panel. It is used to selectively enable or disable counting while the *micro*Gate is active.

Disabled / External / Internal
Enables or disables the *micro*Gate function. When set to *External*, the actual *micro*Gate input on the MCPC618 front panel is used to control the gating — the delay and width adjustments in the GUI are ignored. For the *Internal* setting, the delay and width of the *micro*Gate are set by the user in the GUI.

Sync Edge
Synchronizes the *micro*Gate to either the *rising* or *falling* edge of the *micro*Gate input.

Delay
Sets the delay from the rising or falling edge of the *micro*Gate input to the start of the *micro*Gate.

Width
Sets the period of the *micro*Gate.

Gate Polarity
Sets the polarity of the *micro*Gate so that counting can be either enabled or inhibited while the *micro*Gate is active.

Count

Sets the count period parameters for the acquisition process.

Boxcar
Available only with *Edge* trigger type, *Boxcar* mode uses the externally supplied trigger signal to effectively set the count period delay and count period duration. The preset count period parameters are ignored. The count period starts immediately after the rising edge of the user supplied boxcar trigger signal. The count period time equals the width of the boxcar signal.

Count Period Delay
Used with *Edge, Input,* and *Pre-trigger* types, this parameter sets the delay from the trigger source to the start of the count period. Negative values are permitted if *Pre-trigger* is selected as the trigger type. This parameter is ignored when *Boxcar* mode is enabled.

Count Period
Used with all trigger types, this parameter sets the duration of the count period. For *Input* and *Pre-trigger*, the period minimum is equal to the sample period, T_S, of the MCPC618. When using *Input* or *Pre-trigger*, only integer multiples of the sample period can be used as the *Count Period*. This parameter is ignored when *Boxcar* mode is enabled.

Vertilon Corporation, 66 Tadmuck Road, Westford, MA 01886 / Tel: (978) 692-7070 / Fax: (978) 692-7010 / www.vertilon.com

Trigger

Sets the trigger parameters for the acquisition process.

Type

Used to select the trigger type of *Edge, Internal*, *Level*, *Input*, *or Pre-trigger*. For *Edge, Level* and *Pre-trigger* types, the user supplies the trigger signal (positive edge/level) to the trigger input BNC connector on the MCPC618. For *Internal* trigger type, the unit supplies the internal trigger and therefore no external input is required. *Input* triggering does not require a trigger signal but does require setting a threshold level.

Rate

Used in conjunction with *Internal* and *Level* trigger types. This parameter sets the rate of the internally generated trigger signal.

Threshold

Sets the count threshold level for *Input* triggering. This level should not be confused with the threshold setting for the discriminators.

Channel

Sets the channel number used for *Input* triggering.

Vertilon Corporation, 66 Tadmuck Road, Westford, MA 01886 / Tel: (978) 692-7070 / Fax: (978) 692-7010 / www.vertilon.com

Real Time Display Area

The display area is used to give a graphical view of the data collected while in the *Display Only* and *Display & Log* acquire modes. For these modes the displayed data is obtained directly from the MCPC618 in real time. Data is also shown in the display area when viewing a previously logged file in *Log File View* mode. The display area and its associated control functions are disabled when *Log Only* is selected as the acquisition mode.

Graphical Display

Displays the real time signal in total counts accumulated during the count period for each of the input channels. Count data is also shown on the display when viewing a previously logged file in *Log File View* mode.

Display Limit Adjust

Clicking the upper or lower vertical scale value allows the display limits to be adjusted.

Filter Match

This function is active when the data filter processing is enabled. It indicates when the displayed count record matches the filter criteria.

Out of Range

Indicates when one or more channels in a displayed record are out of range.

Input Error

Indicates when an input error has been detected on one or more channels in a displayed record. Counting input overloads are generally caused when a sizeable pulse is detected on the input to the counting channel's preamplifier. Typically this is the result of a large amount of light incident on the detector such that individual photons overlap and therefore can no longer be separately detected. A sustained DC light condition can also cause an input error.

Trigger Count

This indicator keeps count of the absolute number of triggers seen by the system since the beginning of the *Acquire* period. The counter is reset at the start of the *Acquire* period and effectively counts all triggers (regardless of whether a trigger was accepted or rejected) until the *Acquire* period ends. If the *Trigger Count* equals the *Record Count* after the acquired data has been transferred to the PC, then no triggers were missed. Note that if the record rate is exceptionally high, the displayed *Trigger Count* will slightly lag the actual trigger count measured by the system. It is also important to note that unlike *Log Only* mode where the displayed *Trigger Count* will be equal to the *Trigger End Count* at the end of the acquisition period, this will usually not be the case when using the *Display* and *Display & Log* modes. Although the system in these modes will accurately count the triggers and stop when the *Trigger End Count* is reached, the final displayed *Trigger Count* will only indicate the number of triggers counted when the last count record was acquired. The additional triggers are counted to reach the *Trigger End Count* but not displayed because none of them resulted in the acquisition of a count record.

Vertilon Corporation, 66 Tadmuck Road, Westford, MA 01886 / Tel: (978) 692-7070 / Fax: (978) 692-7010 / www.vertilon.com

Trigger End Count

A user programmable value that specifies the *Trigger Count* value that terminates the *Acquire* period. This is normally used in the *Log Only* acquisition mode where it is set equal to the total number of count records to be acquired. In this way, the MCPC618 acquires a complete set of count records in its buffer, ends its acquisition period, and transfers the buffered data to the PC. A value of zero for the *Trigger End Count* corresponds to an infinite acquisition period.

Trigger Rate

Reports the average trigger rate measured over the period of time set in the *Gate Time* box. The reported rate is calculated by taking the total number of triggers seen by the system during the *Gate Time* and dividing by the *Gate Time*. The *Trigger Rate* is unaffected by the actual number of records collected by the unit.

Gate Time

The period of time over which the *Trigger Rate* is calculated.

Record Count

Indicates the running total of the number of records accepted by the MCPC618 and transferred to the PC. The counter is cleared when an acquisition period is restarted and will roll over if the maximum record total is reached. This counter is also used as an indicator of the total number of count records in a log file when in *Log File View* mode. The *Record Count* and *Trigger Count* are the only two indicators active when in *Log Only* acquisition mode. Note, when the unit is in the *Display Only* or *Display & Log* acquisition modes, the *Record Count* will usually be much less than the *Trigger Count* because the overhead from the real time data display significantly slows the count record acquisition rate. The *Log Only* acquisition mode, on the other hand, is a high speed data acquisition mode that is able to keep up with the trigger rate provided it is within the specified limits. Under these conditions, the *Record Count* will usually equal the *Trigger Count* after the acquisition period ends and all records will be transferred to the PC. However, even in this mode it is possible for the *Record Count* to be less than the *Trigger Count*. This can occur if the maximum trigger rate specification is exceeded—even momentarily—or if the *Acquire* button is pressed while active triggers are input to the system. To avoid the latter situation, the *Acquire* button should be activated before any triggers are applied to the system.

Record Index

Available only in *Log File View* mode, this box allows the user to scroll through records or to enter a specific record number for viewing from the log file. The maximum record index is equal to the record total.

Trigger/Time Stamp

Shows the trigger or time stamp for the record currently displayed in the display window. The trigger stamp is the running total of all triggers seen by the system since the start of the *Acquire* period. Time stamps are taken in fixed resolution steps as determined in the *Data Configuration* pull-down menu and are referenced to the start of the *Acquire* period. The *Trigger/Time Stamp* counter rolls over after the maximum value is reached. To enable this feature, the *Trigger/Time Stamp* must be selected in the *Data Configuration* menu.

Display

Selects the type of data plotted on the display. The logged data and processing functions are unaffected by these selections.

Signal
The count for the eight input channels is plotted on the real time display. If *Background Subtraction* is enabled, the raw input signal minus the background is displayed.

Background
Only the pre-calculated background signal is plotted on the real time display. Select this display function when initially configuring the system to minimize the background optical signal or dark count. This function is only available if *Background Subtraction* processing is enabled.

Channel
The horizontal channels (1 through 8) for display are selected using this feature.

Vertilon Corporation, 66 Tadmuck Road, Westford, MA 01886 / Tel: (978) 692-7070 / Fax: (978) 692-7010 / www.vertilon.com

Pull Down Menus

The pull down menus are available at the top of the graphical user interface window.

File

File operations generally consist of storing and retrieving configurations between the PC and the MCPC618's volatile and non-volatile (flash) memory. Configuration information stored in volatile memory will be lost when power to the unit is removed. The default configuration will be loaded on power up. Configuration information stored in flash memory will be retained even when power to the MCPC618 is removed.

New
Loads the MCPC618 with the default configuration.

Open
Loads the MCPC618 with a stored configuration from a file on the PC.

Save
Saves the current configuration of the MCPC618 to a file on the PC.

Save As
Saves the current configuration of the MCPC618 to a new file on the PC.

Read from Flash
Loads the MCPC618 with the configuration stored in the unit's flash memory.

Write to Flash
Writes the current configuration of the MCPC618 to its flash memory

Print Window
Prints the current window.

Exit
Closes the executable.

Vertilon Corporation, 66 Tadmuck Road, Westford, MA 01886 / Tel: (978) 692-7070 / Fax: (978) 692-7010 / www.vertilon.com

System

The MCPC618's basic operation is configured through this pull down menu.

Data Configuration

Opens the dialog box shown below where the unit's basic system parameters are configured. The system speed and log file size are affected when any of these items are selected. See section on Log Files for the specifics on the log file sizes.

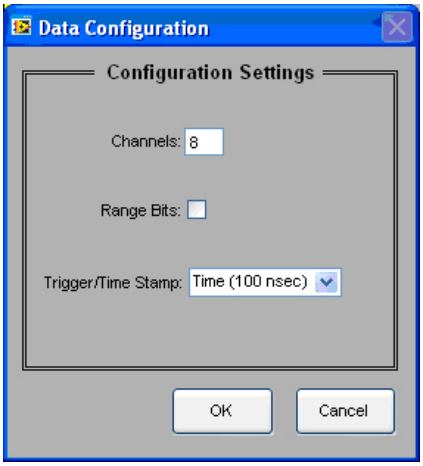

Figure 10: Data Configuration Dialog Box

Channels

Configures the number of input channels used by the system which in-turn determines the size of the output data packets.

Range Bits

Inserts out of range (OOR) and input error (ERR) data for each channel into the log file. The range data is reported for each channel in each record. Out of range occurs when the photon count during the count period exceeds the accumulator's maximum range. An input error is reported when a DC condition is detected on the counting input. Regardless of whether *range bits* option is selected, the header for each record will contain data to indicate if at least one of the channels in the count record is out of range or has an input error.

Trigger / Time Stamp

Inserts a two word trigger or time stamp at the end of each record in the log file. The selection choices are *Trigger, Time (100nsec), Time (1 usec), Time (10 usec), Time (100 usec), Time (1 msec), and Off*. No trigger or time stamp is inserted into the log file if *Off* is selected.

The *Trigger* option inserts the absolute count of the number of triggers seen by the system for each record that is acquired. The trigger stamp is reset to zero at the start of *Acquire* mode. Ideally the trigger stamp will increment by exactly one for each record. An increment of greater than one indicates that one or more triggers were missed. This usually indicates that the trigger rate exceeded the maximum trigger rate for the system.

Vertilon Corporation, 66 Tadmuck Road, Westford, MA 01886 / Tel: (978) 692-7070 / Fax: (978) 692-7010 / www.vertilon.com

The five *Time* options are used to insert a time stamp with a programmable resolution from 100 nsec to 1 msec. Like the trigger stamp, the time stamp is reset to zero at the start of *Acquire* mode. To obtain absolute time, an absolute time stamp — taken when the MCPC618 first enters *Acquire* mode and inserted into the header at the top of each log file — can be added to the relative time stamps appended to each record. The time stamp can function as a good diagnostic tool if trigger frequency needs to be measured.

High Voltage Supply

Opens the dialog box shown below where the optional high voltage bias supply is configured.

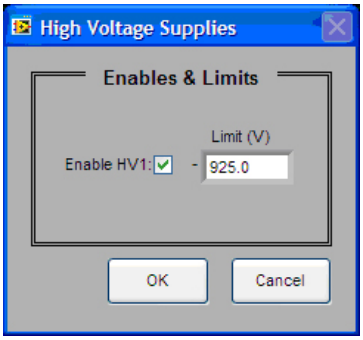

Figure 11: High Voltage Supply Dialog Box

Enable HV1

Allows optional high voltage bias supply #1 to be controlled from the front panel. If this box is unchecked, the supply is turned off and the front panel controls are disabled.

HV1 Limit

Sets the voltage limit for high voltage bias supply #1 so that the user cannot select a set point above this level from the front panel.

Vertilon Corporation, 66 Tadmuck Road, Westford, MA 01886 / Tel: (978) 692-7070 / Fax: (978) 692-7010 / www.vertilon.com

Processing

The MCPC618's processing functions are configured through this pull down menu.

Background Subtraction

The MCPC618 includes a processing function that continuously subtracts a pre-calculated background level from the raw signal from each of the input channels. This function is useful when the raw input signal is dominated by a stable DC background level or dark count. By enabling the *Background Subtraction* processing, the DC background signal is removed from each channel for each record so that only the actual desired signal can be displayed or logged. Pressing the *Apply* button performs the background level computation on each channel. The computed values are then used for the *Background Subtraction* processing if enabled. Calculation of the background level should be initiated anytime the user changes the system parameters. Note that *Background Subtraction* does not increase the dynamic range of the system nor does it remove the shot noise associated with the background. Its main use is to improve the display of the data and simplify the post processing of the logged data. It is also useful for optical system setup diagnostics.

Gain Compensation

Gain compensation processing allows the user to normalize the outputs from the individual channels. This is helpful when compensating for channel-to-channel responsivity or quantum efficiency differences in PMTs and silicon photomultipliers. The gain compensation dialog box shown in Figure 12 lets the user adjust each channel by a positive or negative percentage. For example, a positive 2% adjustment into a specific channel will effectively multiply the raw count data for that channel by 1.02. A negative 2% adjustment would multiply the raw count data by 0.98. The compensation coefficient range is -100% to +100%. The coefficients default to 0 % when gain compensation is disabled.

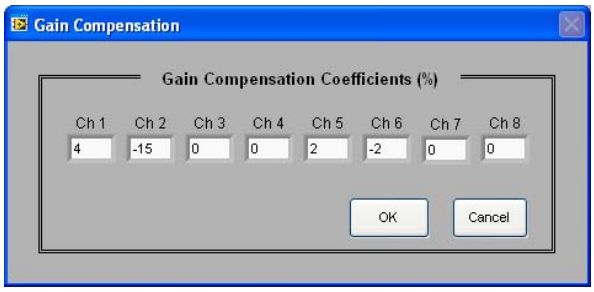

Figure 12: Gain Compensation Dialog Box

Data Filtering

Data Filtering is used to selectively display, log, or tag records that meet a specific user defined matching criteria. It is described in more detail in the Data Filtering section.

Utilities

Generate Diagnostic Report

Automatically runs diagnostic routines and generates a diagnostic report using the current system configuration. A trigger must be supplied (either internal or external) before this routine is run.

Log File Converter

This utility converts the binary files (.log) created during logging into tab delimited text files (.txt). The readable text files can be used as is or imported into a database program for further processing. For details on the data format of binary and text log files, the Log Files section of this manual should be consulted.

When the *Log File Converter* utility is selected, the dialog box shown in Figure 13 opens. Here the user selects the source binary file (.log) that is to be converted into a text file (.txt) by pressing the *Select File* button. This in turn opens the dialog box shown in Figure 14 where the user then browses to the source file. The target file is the name of the text file that results from the conversion of the source binary file. Similar in behavior to the source file select button, a dialog box opens where the user browses to the target directory and names the target file. Once both the source and target files are selected, the converter is initiated by pressing the *Convert* button. The progress of the log file conversion process is monitored by observing the Progress bar at the top of the dialog box.

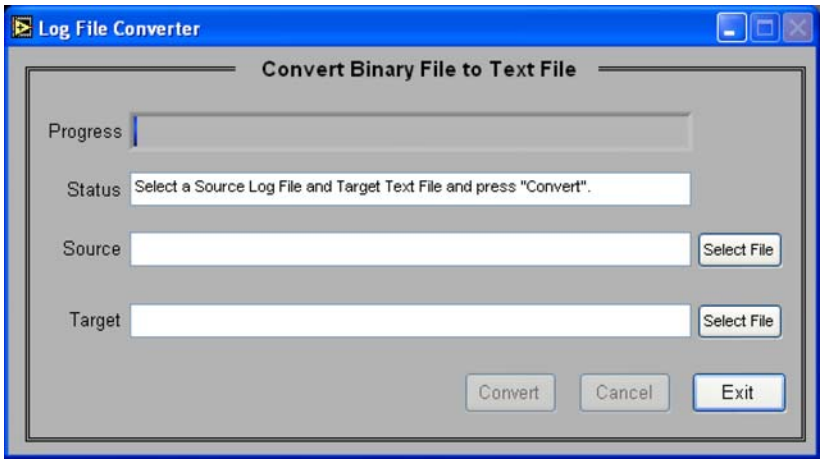

Figure 13: Log File Converter Dialog Box

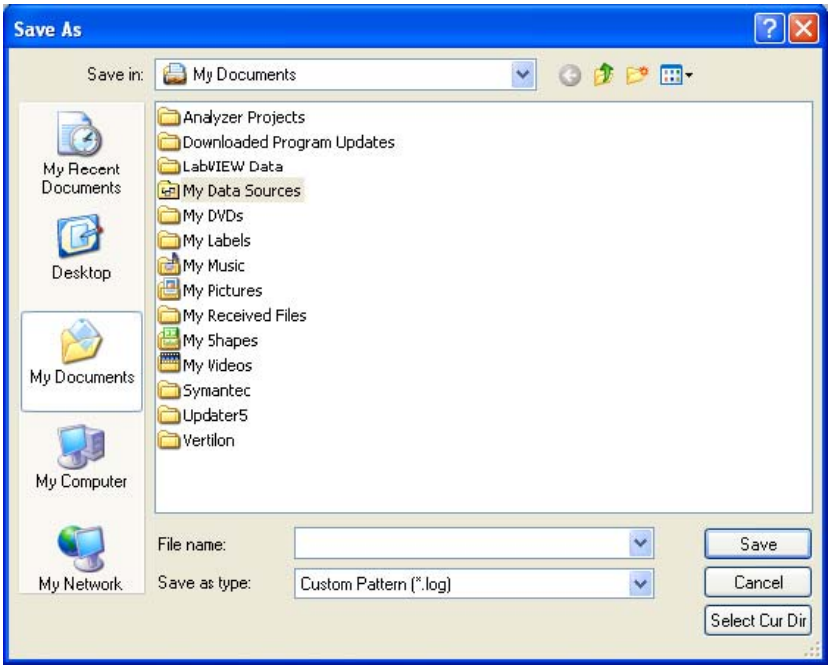

Figure 14: Select File Dialog Box

The *Log File Converter* can also process binary files in a batch mode to save time when multiple binary files are to be converted. Instead of browsing for a source file when the *Select File* button is pressed, the user selects an entire directory by pressing the *Select Cur Dir* (current directory) button as shown in the dialog box above. This effectively selects all binary files (i.e. all files ending in .log) in the source directory for conversion to text files. The target *Select File* button opens up a similar dialog box where the user selects the destination directory for the text files with the *Select Cur Dir* button. Pressing the *Convert* button converts all files with the .log extension in the source directory, and places the resulting text files into the destination directory. The target file names are identical to the source names except the file extension is changed from .log to .txt. Note that since the batch mode of the *Log File Converter* attempts to convert all files ending in .log into text files, care should be taken to ensure that all .log files in the source directory are valid binary log files. If the converter encounters an invalid binary file, the conversion process will abort and no files, valid or invalid, will be converted.

Data Filtering

When the *Data Filtering* processing function is enabled, each record is compared to a predefined filter criteria. If the result is true, records in the log file are tagged so that those that meet the filter criteria can be identified when subsequently displayed or analyzed. To minimize the data processing load to the host processor, a *Block Data Transmission* configuration switch is available to block records that do not meet the filter criteria from being logged or displayed. When this switch is set, only data that generates a true response to the filter criteria is transmitted. Note, since data filtering is a real-time embedded DSP functions in the PhotoniQ, a reduction in the maximum data acquisition rate can be expected when this function is enabled.

Spectral filtering is most useful in applications where the acquired data represents wavelength or frequency information. It is also possible to use it in one dimensional, linear positional applications. Typically the spectral filter is configured to accept or reject records that meet a predefined criteria or discriminant. For instance, the filter can be setup to acquire records that match a particular fluorescence spectral pattern and reject all others. Parameters for the filter are entered in three tabbed panes in the dialog box under the *Spectral Filtering* option in the *Processing* menu. The data filtering processor operates on spectral bands defined by the user in the *Band Definition* pane according to a Boolean expression defined in the *Flag Definition* and *Discriminant Definition* panes.

Band Definition

The *Band Definition* pane allows the user to create a set of up to eight frequency or position bands that are used to compare spectral or location regions, respectively. A band is defined as a continuous sequence of channels. For example, in the figure below Band 1 is defined as channels 3 through 5 and Band 2 as channels 6 through 7. Bands 3 through 8 are not defined. It is not necessary to define all bands. However, care should be taken to not include unused channels in a band definition or unused bands in the *Flag Definition* described on the next page.

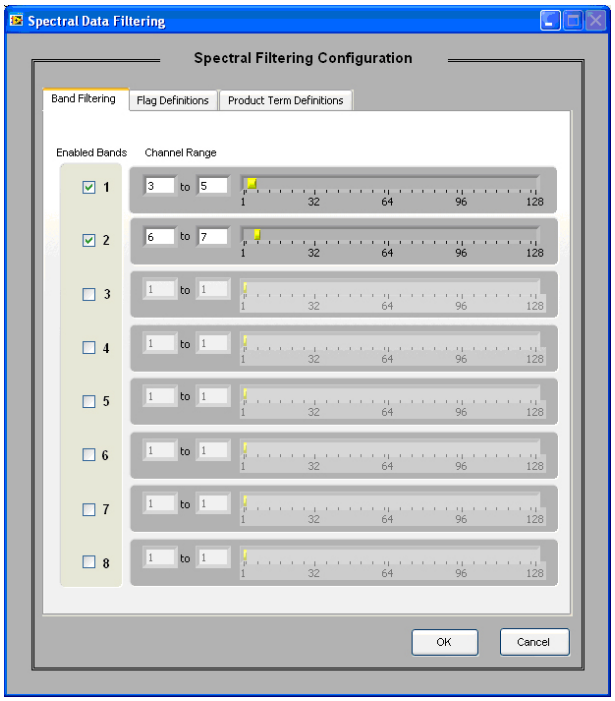

Figure 15: Band Definition Pane

Flag Definition

Up to eight flags can be defined by the user in the *Flag Definition* pane. The result of a flag computation on the spectral or position data is either true or false. All eight flags have the same structure in which the operand on the left is tested for being greater than the operand on the right. Within each operand, the user selects either a constant corresponding to a number of counts, or a multiplier for the average of one of the bands defined in the *Band Definition* pane. This allows the data filter processor to compare a band to a constant or compare two independently scaled bands to each other. Referring to the example below, two flags (Flag 1 and Flag 2) are defined in the *Flag Definition* pane. Flag 1 is true if one times the average of Band 1 is greater than 60 counts and Flag 2 is true if one times the average of Band 2 is less than 70 counts. The data discriminator operates on these two flags with a user defined function to determine if a filter match occurred. Note the user should only use bands in the flag definitions that have been enabled and defined in the *Band Definition* pane.

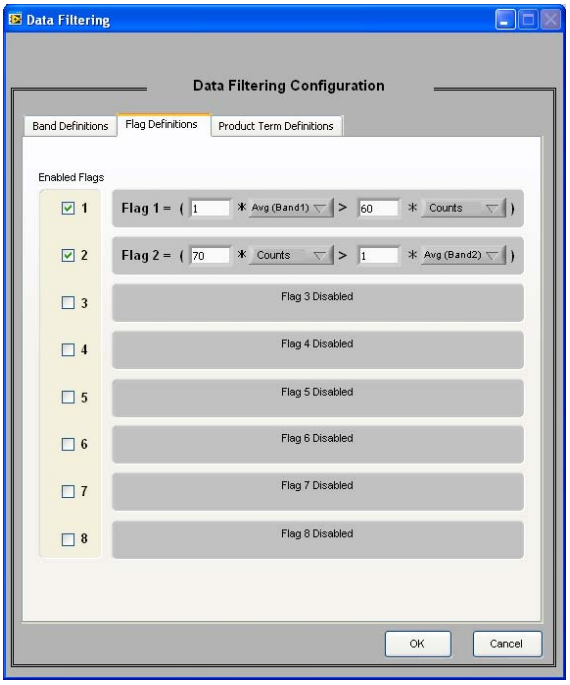

Figure 16: Flag Definition Pane

Vertilon Corporation, 66 Tadmuck Road, Westford, MA 01886 / Tel: (978) 692-7070 / Fax: (978) 692-7010 / www.vertilon.com

Discriminant Definition

The data filter match function is programmed in the *Discriminant Definition* pane as a logical combination of the previously defined flags utilizing a sum of products format. Each row in the table is a grouping of flags that are logically AND'd together. The rows are then logically OR'd to produce the filter result. The *Filter Criteria* line shows the resulting equation with "*" representing a logical AND and "+" representing a logical OR. Each record can thus generate only a true or false condition. The user should only use flags in the discriminant definition that have been defined and enabled in the *Flag Definition* pane. Checking the *Block Data Transmission* box in the *Discriminant Definition* pane forces record data that generates a false response to the filter criteria to be blocked from being logged or displayed.

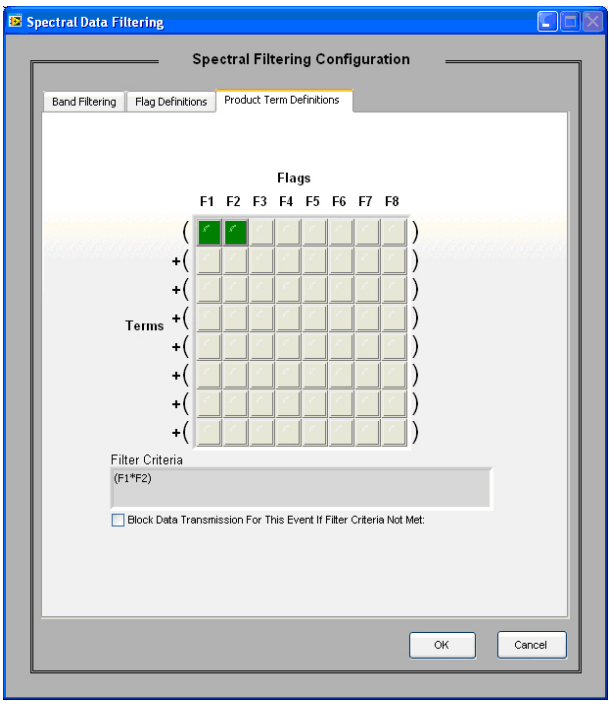

Figure 17: Discriminant Definition Pane

With the product term definition shown above, the data filter function will generate a match only if the average of channels 3, 4, and 5 is greater than 60 counts and the average of channels 6 and 7 is less than 70 counts. The records that meet this criterion will have their corresponding *data filter match* bit set in the log file. However, because the *Block Data Transmission* box is not checked, all records will be logged, regardless of the match condition.

Log Files

The Control and Acquisition Interface Software produces binary log files during data collection that can be viewed using the GUI display or processed off-line for more thorough data analysis. The GUI display function is accessed using the *Log File View* on the front panel. This acquisition mode allows the user to step through and view individual *count* records in the binary log file. More advanced data processing functions such as sorting and pattern detection can be applied by operating directly on the binary log files or by using spreadsheet-based routines on text log files. If text file format is desired, a function included with the Control and Acquisition Interface Software is used to convert the binary log files to text log files.

Binary Log File Format

Binary log files are used to minimize the time required to transfer the data from the MCPC618 to a hard disk on a PC. To reduce processing overhead and storage requirements, it is recommended that any off-line data manipulations operate on this type of file. The contents of the binary log files written by the Control and Acquisition Interface Software can be broken into three main sections; the identification text header, the configuration table, and the data block. The *ID Text Header* defined in Table 5 below is a simple header that identifies the PhotoniQ model number, date, time (24 hour format), and version information. It is organized along 8-bit byte boundaries.

Offset (Bytes)	Description	Length (Bytes)	Contents
0	Product ID	17	"Vertilon xxxxxx[CR][LF]"
17	Date/Time String	19	"MM/DD/YY HH:MM xx[CR][LF]"
36	Software UI Version	28	"LabVIEW UI Version xxxxxxx[CR][LF]"

Table 5: Binary Log File (ID Text Header Section)

The *Config Table* section shown in Table 6 contains configuration information relating to the MCPC618 hardware and firmware. Unlike the *ID Text Header* section, the *Config Table* section is organized as 16-bit words instead of 8-bit bytes. The configuration data is partitioned into three tables; *user*, *custom*, and *factory*. The *user* table contains the configuration of the unit set by the user through the user interface. Any custom configuration data is stored in the *custom* table. Factory-programmed, read-only configuration data is found in the *factory* table.

Offset (Words)	Description	Length (Words)	Contents
32	Config Table Revision	1	1st 8 bits = Major Rev, 2nd 8 bits = Minor Rev
33	User Config Table	1000	User Configuration Binary Data
1033	Custom Config Table	250	Custom Configuration Binary Data
1283	Factory Config Table	750	Factory Configuration Binary Data

Table 6: Binary Log File (Config Table Section)

Vertilon Corporation, 66 Tadmuck Road, Westford, MA 01886 / Tel: (978) 692-7070 / Fax: (978) 692-7010 / www.vertilon.com

The *Data Block* section defined in Table 7 below is made up of records that contain the *count* data for each channel. One record is created for each trigger that is acquired while logging. The length (L) of the record is dependent on the configuration settings selected in the user interface. Count record data is partitioned along 16-bit word boundaries.

Offset (Words)	Description	Length (Words)	Contents
2033	Record # 1	L	First Count Record
2033 +L	Record # 2	L	Second Count Record
…	…	L	…
2033 +(n-1)*L	Record # n	L	nth Count Record
…	…	…	…

Table 7: Binary Log File (Data Block Section)

Count Record Description

Count Record Format

Each *trigger* processed by the system generates a record of length L, where L is in 16-bit words. The record consists of a single word header followed by one additional word of count data for each channel enabled in the system. Depending on the configuration, there may be additional words following the count data. The figure below shows a generic example of a count record for a system configured with reporting for *Range Bits* and *Trigger/Time Stamp* (TS1, TS2) enabled. The MCPC618 produces a maximum of 12 data words per trigger (9 data words with *range* and *trigger / time stamp* words off) when all eight channels are enabled.

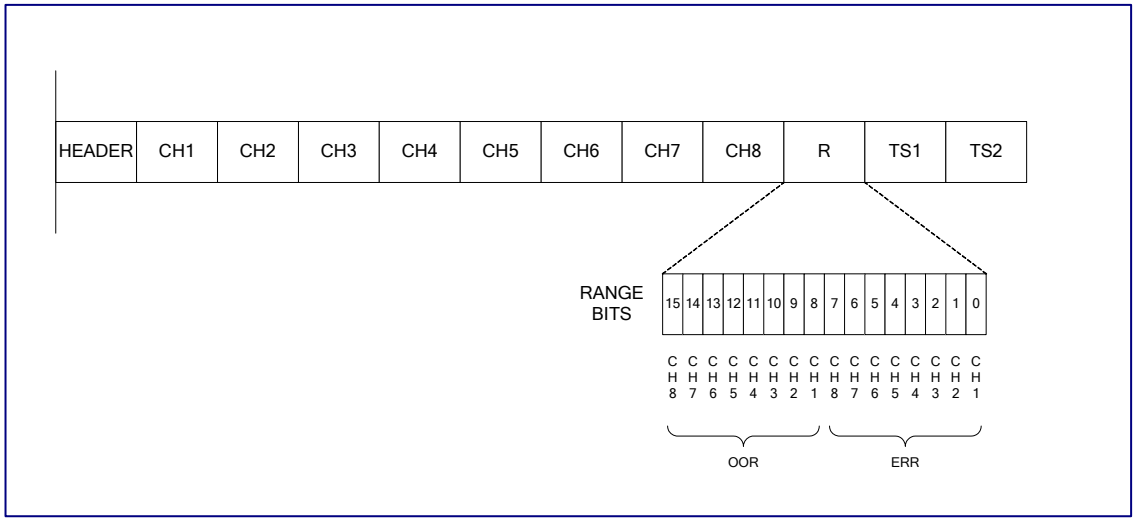

Figure 18: Count Record Format

Header Word

The contents of the count record header word are detailed in the table below.

Bit	Function	Description
15-13	Record Type	'100' = Normal Record
12	Out of Range Fault	'0' = No Faults Detected in Record '1' = At Least 1 Fault Detected in Record
11	Input Error Fault	'0' = No Faults Detected in Record '1' = At Least 1 Fault Detected in Record
10-6	Reserved	Reserved for Future Use
5	Filter Match	'0' = Filter Condition Not Met for Record or Filtering Not Enabled '1' = Filter Condition Met for Record
4-0	Filter Match Library Number	Library Number of Filter Match Don't Care if No Filter Match (currently unsupported)

Table 8: Data Packet Header Word

Signal Data

Signal data is organized sequentially starting with the count data from the first channel followed by the data from the second channel, and so on. Individual channels are included in the count record only if they are enabled under the *Data Configuration* menu. Signal channels are formatted as unsigned 16-bit magnitude-only words with the LSB for each word located in bit 0. The integer value for each signal channel is equal to the total number of counts accumulated by the system during the count period.

Range Bits

Following the signal data in the record is the "bit-packed" *range* word that, if enabled, holds the range reporting bits. Disabling the range bit reporting under the *Data Configuration* menu removes the range words from the count record. Out-of-range (OOR) and input error (ERR) bits are formatted as shown in Figure 18. Range bits for unused channels should be ignored.

Trigger / Time Stamp

The trigger/time stamp is encoded as a two word (32-bit) value. The least significant word follows the most significant word in the count record. For time stamp reporting the trigger time relative to the start of the acquisition (the time in the *ID Text Header*) is computed by multiplying the time stamp by the time stamp resolution selected in the *Data Configuration* menu. Disabling the reporting enable for this field removes that data from the count record.

Count Record Length

The length (L) in words of each count record is given by the equation:

$$L = 1 + NC + R + 2 \cdot TS$$

The settings include the *Number of Channels* (NC) and the reporting enables for the *Range Bits* (R) and *Trigger/Time Stamp* (TS). The reporting enables are set in the *Data Configuration* menu and can be either '1' or a '0'.

Vertilon Corporation, 66 Tadmuck Road, Westford, MA 01886 / Tel: (978) 692-7070 / Fax: (978) 692-7010 / www.vertilon.com

Converting a Binary Log File to Text

Text log files should be used if a user wishes to import logged count data into a spreadsheet for further processing. A built in routine is included in the GUI for the purpose of converting a binary log file (.log extension) into a text file (.txt extension). The output of this conversion is a file containing a time and date stamp header and the logged count records organized by row where each row represents the input count totals from each successive trigger. The *count* records are stored as tab-delimited numbers where the columns represent from left to right, *Packet Number* (#), *Packet Type* (PT), *Out of Range* (OR), *Input Error* (IE), *Filter Match* (FM), and the count totals for channels 1 through N. Only configured channels appear in the log file — unused channels are left out. If enabled, the *Trigger/Time Stamp* (TS) is stored in the last column. A '4' is always present in the *Record Type* column. An out of range condition on any of the N data channels is identified in the *Out of Range* column by a '1'. Input errors are similarly reported in the *Input Error* column. If range bit reporting was enabled during logging, the individual channel data columns will contain the value "MAX" depending on whether the count exceeded the maximum value of the input accumulator. An input error on a particular channel is identified by the value "ERR" in its respective column in the table. The *Filter Match* column contains a '1' when the count data met the filter criteria or a '0' when it did not. If filter processing is not enabled this column is filled with '0'. Due to conversion speed limitations, the log file converter should be used on files containing less than 20,000 records. Larger files will take a noticeable time to process.

Vertilon Corporation, 66 Tadmuck Road, Westford, MA 01886 / Tel: (978) 692-7070 / Fax: (978) 692-7010 / www.vertilon.com

Configuration Tables

The hardware and software configuration of the PhotoniQ is stored in three separate tables; *user*, *custom*, and *factory* configuration tables. The sections that follow summarize the contents of the three tables. Some configuration parameters are not used in certain PhotoniQ products. Additionally, parameter limits may differ depending on PhotoniQ model number.

User Configuration Table

The *user* table contains the configuration of the PhotoniQ set by the user through the user interface. It is 1000 words long and is described in the table below.

Index	Parameter Name	Type	Description	Parameter Limits
0	SystemMode	16 SHORT	Indicates current system mode, acquire or standby mode	0 = Standby Mode 1 = Acquire Mode
1	HVLimit0	16 SHORT	Maximum allowed voltage on HV supply 1	Range = 100 – 13900 (10 – 1390V)
2	HVLimit1	16 SHORT	Maximum allowed voltage on HV supply 2	Range = 100 – 13900 (10 – 1390V)
3	NumChannelsB0	16 SHORT	Number of channels enabled bank 1	Range = 0 – 64
4	NumChannelsB1	16 SHORT	Number of channels enabled bank 2	Range = 0 – 64
5	NumChannelsB2	16 SHORT	Number of channels enabled bank 3	Range = 0 – 64
6	NumChannelsB3	16 SHORT	Number of channels enabled bank 4	Range = 0 – 64
7	HVEnabled	16 SHORT	Enables for high voltage supplies	Bit 0 = HV Supply 1 Enable/Disable Bit 1 = HV Supply 2 Enable/Disable
8	HVSetpoint0	16 SHORT	Current setpoint HV supply 1 (DAC 6)	Range = 100 – 13900 (10 – 1390V)
9	HVSetpoint1	16 SHORT	Current setpoint HV supply 2 (DAC 7)	Range = 100 – 13900 (10 – 1390V)
10	UserConfigID	16 SHORT	Unused	N/A (0 – 65535)
11	DCRD_AOut_0	16 SHORT	Daughtercard analog out control (DAC 8)	0-4095 (3.0V full scale)
12	BandEnables	16 SHORT	Spectral filtering band enables	Range = 0 – 255 (each bit position corresponds to 1 of 8 band enables)
13	Band0StartIndex	16 SHORT	Start index for spectral filtering band 1	Range = 0 – 255 (1 channel per bit)
14	Band0EndIndex	16 SHORT	End index for spectral filtering band 1	Range = 0 – 255 (1 channel per bit)
15-28	Band Indices for Remaining Bands	16 SHORT	Start index for spectral filtering band 2 - 8 End index for spectral filtering band 2 - 8	Range = 0 – 255 (1 channel per bit)
29	FlagEnables	16 SHORT	Spectral filtering flag enables	Range = 0 – 255 (each bit position corresponds to a flag enable)
30-33	Flag0Operand0-Flag0Operand3	16 SHORT	Spectral filtering operands for flag 1 configuration	Flag0Operand0,2 Range = 0 – 32767 Flag0Operand1,3 Range = 0 – 7 or 65535 (1 channel per bit or LSB wgt, 65535)
34-37	Flag1Operand0-Flag1Operand3	16 SHORT	Spectral filtering operands for flag 2 configuration	Same as Above
38-41	Flag2Operand0-Flag2Operand3	16 SHORT	Spectral filtering operands for flag 3 configuration	Same as Above

Vertilon Corporation, 66 Tadmuck Road, Westford, MA 01886 / Tel: (978) 692-7070 / Fax: (978) 692-7010 / www.vertilon.com

Index	Parameter Name	Type	Description	Parameter Limits
42-45	Flag3Operand0-Flag3Operand3	16 SHORT	Spectral filtering operands for flag 4 configuration	Same as Above
46-49	Flag4Operand0-Flag4Operand3	16 SHORT	Spectral filtering operands for flag 5 configuration	Same as Above
50-53	Flag5Operand0-Flag5Operand3	16 SHORT	Spectral filtering operands for flag 6 configuration	Same as Above
54-57	Flag6Operand0-Flag6Operand3	16 SHORT	Spectral filtering operands for flag 7 configuration	Same as Above
58-61	Flag7Operand0-Flag7Operand3	16 SHORT	Spectral filtering operands for flag 8 configuration	Same as Above
62-69	PTerm0-PTerm7	16 SHORT	Spectral filtering product terms	Range = 0 – 255 (each bit position corresponds to a flag)
70	DataFilterEnable	16 SHORT	Spectral filtering data filter blocks data output if there is no spectral filter match	0 = Disabled 1 = Enabled
71	ProcessingEnables	16 SHORT	Enables for various signal processing options	Bit 0 = Spectral Filtering Enable Bit 1 = Gain Enable Bit 2 = Background Subtraction Enable
72	TimestampEnable	16 SHORT	Enables/Disables timestamp output	0 = Disabled 1 = Enabled
73	DAC_Spare	16 SHORT	SIB analog out control (DAC 5)	0-4095 (3.0V full scale)
74-75	TimestampInterval	32 LONG	Timestamp interval configuration	Range = 10 – 100000 (10ns per bit)
76	CustomWordsEnable	16 SHORT	Enables/Disable custom words output	0 = Disabled 1 = Enabled
77	EventCustomCount	16 SHORT	Number of custom words	Range = 0 – 64 (1 word per bit)
78	RESERVED	16 SHORT	Unused	N/A (0 – 65535)
79	ImageAcqMode	16 SHORT	Image Acquisition Mode Enable	0 = Particle 1 = Image
80	InputTrigThresh	16 SHORT	Input trigger threshold	Range = 1 – 8191
81	InputTrigChannel	16 SHORT	Input trigger current channel	Range = 0 – 256 (1 channel per bit)
82	RangeErrorEnable	16 SHORT	Enables/Disables range and error output	0 = Disabled 1 = Enabled
83	CrossBankConfig	16 SHORT	Current cross-bank configuration	Bit 0 = Cross Bank Enable Bit 1 = Bank 1 Main Trigger Bit 2 = Bank 2 Main Trigger Bit 3 = Bank 3 Main Trigger Bit 4 = Bank 4 Main Trigger
84	ReportPackingMode	16 SHORT	Indicates high speed or real-time acquisition	0 = Real-Time Acquisition (no packing) 1 = High Speed Acquisition
85	GPOutputEnable	16 SHORT	Enables/Disables general purpose output	0 = GP Output Disabled 1 = GP Output Always On 2 = GP Output Linked to Spectral Filter Match
86-87	GPOutputDelay	32 LONG	General purpose output delay	Range = 10 – 200000 (0.1 – 2000us)

Vertilon Corporation, 66 Tadmuck Road, Westford, MA 01886 / Tel: (978) 692-7070 / Fax: (978) 692-7010 / www.vertilon.com

Index	Parameter Name	Type	Description	Parameter Limits
88-89	GPOutputPeriod	32 LONG	Period of general purpose output	Range = 10 – 200000 (0.1 – 2000us)
90	IntBoxcarEnable	16 SHORT	Enables/Disables boxcar mode	0 = Disabled 1 = Enabled
91	BoxcarWidthEnable	16 SHORT	Enables/Disables boxcar width output	0 = Disabled 1 = Enabled
92-99	ResetDelay0- ResetDelay3	32 LONG	Unused (reset delays 1 through 4)	N/A (0 – 65535)
100- 103	TrigSource0- TrigSource3	16 SHORT	Trigger source bank 1 to 4	0 = External Edge Trigger 1 = Internal Trigger 2 = Level Trigger 3 = Input Trigger 4 = DSP Trigger (Cross bank use only) 5 = Pre-trigger
104- 111	TrigPeriod0- TrigPeriod3	32 LONG	Trigger period bank 1 to 4	Range = 500 – 10000000 (200kHz – 10Hz)
112- 119	IntegPeriod0- IntegPeriod3	32 LONG	Integration period bank 1 to 4	Range = 5 – 10000000 (0.05 – 100000us)
120- 127	IntegDelay0- IntegDelay3	32 LONG	Integration delay bank 1 to 4	Range = -400000 – 10000000 (-4000us – 100000us)
128	SibSel0	16 SHORT	Hamamatsu R5900U-L16	Range = 0 – 0xFFFF
129	SibSel1	16 SHORT	Hamamatsu H8711	Range = 0 – 0xFFFF
130	SibSel2	16 SHORT	Pacific Silicon Sensor AD-LA-16-9-DIL18	Range = 0 – 0xFFFF
131	SibSel3	16 SHORT	Hamamatsu H7260	Range = 0 – 0xFFFF
132	SibSel4	16 SHORT	Undefined	Range = 0 – 0xFFFF
133- 135	SibSel5- SibSel7	16 SHORT	Reserved for SIB expansion	Range = 0 – 0xFFFF
136- 137	TriggerEndCount	32 LONG	Number of Triggers allowed in Acquire mode	Range = 0 – 0xFFFFFFFF
138	TrigStampSelect	16 SHORT	Triggerstamp Enable	0 = Disabled 1 = Enabled
139- 142	DataFormat0- DataFormat3	16 SHORT	Bank 1 to 4 data format	0: 17-bit Sign-Magnitude 1: 16-bit 2's Comp w/ shift (FS) 2: 16-bit 2's Comp no shift (HS)
143- 149	RESERVED		Reserved for expansion	
150- 405	Ch0GainComp- Ch255GainComp	16 SHORT	Gain compensation values for each channel	0 – 0xFFFF
406- 661	Ch0TrigThresh- Ch255TrigThresh	16 SHORT	Input triggering threshold values for each channel	0 – 0xFFFF
662- 677	Ch0TrigEnb- Ch255TrigEnb	16 SHORT	Input triggering enables bit packed for each channel	0 = Disabled One bit per channel
678	MBandEnables	16 SHORT	Matrix filtering band enables	Range = 0 – 255 (each bit position corresponds to 1 of 8 band enables)

Vertilon Corporation, 66 Tadmuck Road, Westford, MA 01886 / Tel: (978) 692-7070 / Fax: (978) 692-7010 / www.vertilon.com

Index	Parameter Name	Type	Description	Parameter Limits
679	MBand0StartIndex	16 SHORT	Start index for matrix filtering band 1	Range = 0 – 255 (1 channel per bit)
680	MBand0EndIndex	16 SHORT	End index for matrix filtering band 1	Range = 0 – 255 (1 channel per bit)
681-694	MBand Indices for Remaining MBands	16 SHORT	Start index for matrix filtering band 2 - 8 End index for matrix filtering band 2 - 8	Range = 0 – 255 (1 channel per bit)
695	MFlagEnables	16 SHORT	Matrix filtering flag enables	Range = 0 – 255 (each bit position corresponds to a flag enable)
696-699	MFlag0Operand0-MFlag0Operand3	16 SHORT	Matrix filtering operands for flag 1 configuration	Flag0Operand0,2 Range = 0 – 32767 Flag0Operand1,3 Range = 0 – 7 or 65535 (1 channel per bit or LSB wgt, 65535)
700-703	MFlag1Operand0-MFlag1Operand3	16 SHORT	Matrix filtering operands for flag 2 configuration	Same as Above
704-707	MFlag2Operand0-MFlag2Operand3	16 SHORT	Matrix filtering operands for flag 3 configuration	Same as Above
708-711	MFlag3Operand0-MFlag3Operand3	16 SHORT	Matrix filtering operands for flag 4 configuration	Same as Above
712-715	MFlag4Operand0-MFlag4Operand3	16 SHORT	Matrix filtering operands for flag 5 configuration	Same as Above
716-719	MFlag5Operand0-MFlag5Operand3	16 SHORT	Matrix filtering operands for flag 6 configuration	Same as Above
720-723	MFlag6Operand0-MFlag6Operand3	16 SHORT	Matrix filtering operands for flag 7 configuration	Same as Above
724-727	MFlag7Operand0-MFlag7Operand3	16 SHORT	Matrix filtering operands for flag 8 configuration	Same as Above
728-735	MPTerm0-MPTerm7	16 SHORT	Matrix filtering product terms	Range = 0 – 255 (each bit position corresponds to a flag)
736	MDataFilterEnable	16 SHORT	Matrix filtering data filter blocks data output if there is no matrix filter match	0 = Disabled 1 = Enabled
737	MDataFilterConfig	16 SHORT	Matrix A/B combine parameters	
738	MDataFilterAChannels	16 SHORT	Matrix A channel span in GUI	
739	MDataFilterBChannels	16 SHORT	Matrix B channel span in GUI	
740	MDataFilterA	16 SHORT	Matrix A parameters in row/column format	
741	MDataFilterB	16 SHORT	Matrix B parameters in row/column format	
742	DisplaySetting	16 SHORT	Display mode for GUI graphs	Bit 0 = Bar 32 Bit 1 = Bar 64 Bit 2 = Bar 128 Bit 3 = Bar 256 Bit 4 = Dual 4 x 4 Bit 5 = 8 x 8 Bit 6 = Dual 8 x 8 Bit 7 = 16 x 16
743	Bar32Channels	16 SHORT	Channels for Bar 32 graph	

Vertilon Corporation, 66 Tadmuck Road, Westford, MA 01886 / Tel: (978) 692-7070 / Fax: (978) 692-7010 / www.vertilon.com

Index	Parameter Name	Type	Description	Parameter Limits
744	Bar64Channels	16 SHORT	Channels for Bar 64 graph	
745	Bar128Channels	16 SHORT	Channels for Bar 128 graph	
746	Bar256Channels	16 SHORT	Channels for Bar 256 graph	
747	S8x8Channels	16 SHORT	Channels for single 8 x 8 graph	
748	D4x4ChannelsA	16 SHORT	Channels dual 4 x 4 graph A	
749	D4x4ChannelsB	16 SHORT	Channels dual 4 x 4 graph B	
750	D8x8ChannelsA	16 SHORT	Channels dual 8 x 8 graph A	
751	D8x8ChannelsB	16 SHORT	Channels dual 8 x 8 graph B	
752	S16x16Channels	16 SHORT	Channels single 16 x16 graph	
753	Bar32Attributes	16 SHORT	Attributes for Bar 32 graph	
754	Bar64Attributes	16 SHORT	Attributes for Bar 64 graph	
755	Bar128Attributes	16 SHORT	Attributes for Bar 128 graph	
756	Bar256Attributes	16 SHORT	Attributes for Bar 256 graph	
757	S8x8Attributes	16 SHORT	Attributes for single 8 x 8 graph	Bit 0 = Graph x flip Bit 1 = Graph y flip Bit 2 = Graph transpose Bit 6 = Graph color/BW
758	D4x4Attributes	16 SHORT	Attributes dual 4 x 4 graphs	Bit 0 = Graph A x flip Bit 1 = Graph A y flip Bit 2 = Graph A transpose Bit 3 = Graph B x flip Bit 4 = Graph B y flip Bit 5 = Graph B transpose Bit 6 = Graph color/BW
759	D8x8Attributes	16 SHORT	Attributes dual 8 x 8 graphs	Bit 0 = Graph A x flip Bit 1 = Graph A y flip Bit 2 = Graph A transpose Bit 3 = Graph B x flip Bit 4 = Graph B y flip Bit 5 = Graph B transpose Bit 6 = Graph color/BW
760	S16x16Attributes	16 SHORT	Attributes single 16 x16 graph	Bit 0 = Graph x flip Bit 1 = Graph y flip Bit 2 = Graph transpose Bit 6 = Graph color/BW

Table 9: User Configuration Table

Vertilon Corporation, 66 Tadmuck Road, Westford, MA 01886 / Tel: (978) 692-7070 / Fax: (978) 692-7010 / www.vertilon.com

Custom Configuration Table

The *custom* table is a reserved space of 250 words that is used by applications programmers to store custom configuration data.

Index	Parameter Name	Type	Description	Parameter Limits
1000-1249	CustomElement0-CustomElement249	16 SHORT	Reserved location for custom configuration parameters	N/A (0 – 65535)

Table 10: Custom Configuration Table

Factory Configuration Table

Factory-programmed, read-only configuration data is found in the *factory* table. This table is 750 words long and is described below.

Index	Parameter Name	Type	Description	Parameter Limits
1250-1251	DSPRevCode	32 LONG	DSP Revision Code	None (0 – 0xFFFFFFFF)
1252-1253	FPGARevCode	32 LONG	FPGA Revision Code	None (0 – 0xFFFFFFFF)
1254-1509	Ch0BckgndOffset-Ch255BckgndOffset	16 SHORT	DSP calculated background for each channel	0 - 0xFFFF
1510-1765	Ch0ElecOffset-Ch255ElecOffset	16 SHORT	DSP calculated electrical offsets for each channel	0 – 0xFFFF
1766-1767	SiteSerNum	32 LONG	Unused	None (0 – 0xFFFFFFFF)
1768-1769	BoardSerNum	32 LONG	Board Serial Number	None (0 – 0xFFFFFFFF)
1770	SIBSpareControl	16 SHORT	Unused	Unused
1771	SpeedDyRange	16 SHORT	Speed Dynamic Range for each bank, nibble based	For each nibble (4 bits) 0 = Standard 1 = 16 Bit 2 = 14 Bit
1772	HVPopulated0	16 SHORT	High voltage supply 1 populated	0 = Unpopulated 1 = Populated
1773	HVPopulated1	16 SHORT	High voltage supply 2 populated	0 = Unpopulated 1 = Populated
1774	BiasVoltage	16 SHORT	Bias Voltage Control (DAC 1)	0-4095 (3.0V full scale)
1775	DREVoltage0	16 SHORT	Can be configured for an alternative front-end configuration (DAC4)	0-4095 (3.0V full scale)
1776	RESERVED	16 SHORT	Reserved for expansion	
1777-1780	ResetLowThresh0-ResetLowThresh3	16 SHORT	Reset low threshold for bank 1 to bank 4	0 - 0xFFFF
1781-1784	ResetHighThresh0-ResetHighThresh3	16 SHORT	Reset high threshold for bank 1 to bank 4	0 - 0xFFFF

Index	Parameter Name	Type	Description	Parameter Limits
1785-1788	OORLowThresh0-OORLowThresh3	16 SHORT	Out of range low threshold for bank 1 to bank 4	0 - 0xFFFF
1789-1792	OORHighThresh0-OORHighThresh3	16 SHORT	Out of range high threshold for bank 1 to bank 4	0 - 0xFFFF
1793-1794	VBTest0- VBTest1	16 SHORT	Test voltages (DAC2 and DAC3)	0-4095 (3.0V full scale)
1795-1798	ChProcessingEnables0 ChProcessingEnables3	16 SHORT	Channel processing enables for bank 1 to bank 4	Bit 0 = Deserializer Enable Bit 1 = Reset Threshold Enable Bit 2 = Buffer Enable Bit 3 = Differencer Raw or Subtract Bit 4 = Offset Enable Bit 5 = Gain Enable Bit 6 = Range Adjust Enable Bit 7 = Data Trigger Enable 0 = Disabled, Raw 1 = Enabled, Subtract
1799-1802	NumChPopulated0-NumChPopulated3	16 SHORT	Number of channels populated for bank 1 to bank 4	0- 0xFFFF (Should never exceed 64 channels per bank, 256 total channels)
1803	SignalPolarity	16 SHORT	Signal polarity	Nibble-based (4-bits/nibble) per bank signal polarity select. 0 = Sign Magnitude 1 = Magnitude
1804	TestVoltageEnable	16 SHORT	Test voltage enables bank 1 to bank 4	0 = TV1 Disabled, TV2 Disabled 1 = TV1 Enabled, TV2 Disabled 2 = TV1 Disabled, TV2 Enabled 3 = TV1 Enabled, TV2 Enabled
1805-1806	HV0Parameter0-HV0Parameter1	16 SHORT	High voltage supply 1 normalization parameters	Factory calculated values. Floating-point calculation results * 100 are entered into table.
1807-1808	HV1Parameter0-HV1Parameter1	16 SHORT	High voltage supply 2 normalization parameters	Same As Above
1809	AssemblyRevisionPCRev	16 SHORT	PCB Revision Number	None (0 – 0xFFFF)
1810	AssemblyRevisionLetter	16 SHORT	Assembly Revision Letter	None (Only letters are A-F)
1811	RESERVED	16 SHORT	Reserved for expansion	
1812	X1	16 SHORT	Trigger Indicator LED On Period	1 – 0x32
1813	Y1	16 SHORT	Trigger Indicator LED Off Period	1 – 0x32
1814	X2	16 SHORT	Acquisition Indicator LED On Period	1 – 0x32
1815	Y2	16 SHORT	Acquisition Indicator LED Off Period	1 – 0x32
1816	CPLDRevCode	16 SHORT	CPLD Revision Code	0 – 0xFF
1817 - 1832	ModelNumber	16 SHORT	Model Number String	None (ASCII Codes)
1833	SDRAMPopulated	16 SHORT	SDRAM Type Populated	0: None 1: 32 MByte

Vertilon Corporation, 66 Tadmuck Road, Westford, MA 01886 / Tel: (978) 692-7070 / Fax: (978) 692-7010 / www.vertilon.com

Index	Parameter Name	Type	Description	Parameter Limits
				2: 64 MByte
1834	SDRAMEnabled	16 SHORT	SDRAM Type Enabled	0: None 1: 32 MByte 2: 64 MByte
1836-1837	ProgScaling0	32 SINGLE	Bank 1 floating-point programmable bit scale factor, units of Coulombs	None
1838-1839	ProgScaling1	32 SINGLE	Bank 2 floating-point programmable bit scale factor, units of Coulombs	None
1840-1841	ProgScaling2	32 SINGLE	Bank 3 floating-point programmable bit scale factor, units of Coulombs	None
1842-1843	ProgScaling3	32 SINGLE	Bank 4 floating-point programmable bit scale factor, units of Coulombs	None
1844 - 1999	RESERVED		Reserved for expansion	

Table 11: Factory Configuration Table

Vertilon Corporation, 66 Tadmuck Road, Westford, MA 01886 / Tel: (978) 692-7070 / Fax: (978) 692-7010 / www.vertilon.com

DLL Function Prototypes

To accommodate custom application development, the low-level control and communication functions for the PhotoniQ have been provided in both a dynamic link library (PhotoniQ.dll) and an import library (PhotoniQ.lib). The provided header file (PhotoniQ.h) contains the required function prototypes, typedefs, and other definitions (contained in extcode.h, which is included in PhotoniQ.h and is also provided).

Function Prototypes

The DLL prototype functions use the standard C calling convention and require the run-time engine for LabVIEW™ version 9.0. The five functions provided in the file PhotoniQ.dll are described below. The Windows XP API is leveraged by each of these functions. Typedefs for non-standard types can be found in the header files (PhotoniQ.h and extcode.h).

Initialize:

void __cdecl **Initialize** (long BufferSize, TD1 *errorInNoError, unsigned long *Version, TD1 *errorOut);

Opens and initializes an interface to a PhotoniQ. Sets the amount of buffering used in USB communications with the PhotoniQ, and returns the USB firmware version number from the PhotoniQ.

BufferSize	-	Sets the amount of buffering used in USB communications with the PhotoniQ. Valid range is 8-200. Larger numbers use more buffering, which helps keep the throughput of the interface maximized.
errorInNoError	-	Accepts a standard LabVIEW error cluster. Initialization is not performed if an error is present.
Version	-	Indicates the USB firmware version number.
errorOut	-	Points to error information from the function in a standard LabVIEW error cluster.

Close:

void __cdecl **Close** (TD1 *errorInNoError, TD1 *errorOut);

Closes the interface to a previously initialized PhotoniQ.

errorInNoError	-	Accepts a pointer to a standard LabVIEW error cluster.
errorOut	-	Duplicate error in cluster output.

ControlInterface:

void __cdecl **ControlInterface** (unsigned short Opcode, unsigned short Arguments[], long len, long TimeoutMs, TD1 *errorInNoError, unsigned short *NumRetArguments, unsigned short ReturnedArguments[], long len2, TD1 *errorOut);

Executes a control operation to a previously initialized PhotoniQ. The Opcode input specifies the operation to be executed, and any additional information should be entered using the Arguments input. Any returned information is available in the Returned Arguments output.

Opcode	-	Selects the control operation to be performed.
Arguments	-	Input for any additional information required by the selected control operation.
len	-	Length of Arguments[] array.
TimeoutMs	-	Specifies the time to wait for a response from the PhotoniQ. Value entered in milliseconds.
errorInNoError	-	Accepts a standard LabVIEW error cluster. Control operation is not performed if an error is present.
NumRetArguments	-	Indicates the number of returned arguments.
ReturnedArguments	-	Output for any returned information from the control operation.
len2	-	Length of ReturnedArguments[] array.
errorOut	-	Points to error information from the function in a standard LabVIEW error cluster.

Vertilon Corporation, 66 Tadmuck Road, Westford, MA 01886 / Tel: (978) 692-7070 / Fax: (978) 692-7010 / www.vertilon.com

DataInterface:

void __cdecl **DataInterface** (LVRefNum *fileRefnum, LVRefNum *BoolRefnum, LVRefNum *DigNumRefnum, LVRefNum *TrigCountRefnum, unsigned long NumEvents, double TimeoutS, double TimeToCollect, LVBoolean *HighSpeedMode, TD1 *errorInNoError, LVBoolean *MessagingEnabled, long MessagingArray[], long len, long *NumEventsRead, LVRefNum *dupFileRefnum, LVBoolean *NumEventsReached, LVBoolean *TimeoutReached, LVBoolean *TimeToCollectReached, unsigned short ImmediateEventData[], long len2, double *ElapsedTimeS, TD1 *errorOut);

Collects data from a previously initialized PhotoniQ. Options enable logging to a file, programmable termination conditions, and messaging data availability to another thread/window. Data is collected in Events, where an Event consists of all data generated by the PhotoniQ in response to a single trigger event.

fileRefnum	-	If a valid file refnum is entered in this control, all data collected is logged to that file.
BoolRefnum	-	Allows a calling LabVIEW panel to specify a Boolean control used to terminate data collection (True - Collect Data, False - End Collection and Return).
DigNumRefnum	-	Allows a calling LabVIEW panel to specify a Digital Numeric control used to display the running total number of events collected.
TrigCountRefnum	-	Allows a calling LabVIEW panel to specify a Digital Numeric control used to display the running total number of triggers from the trigger counter.
NumEvents	-	Specifies the number of Events to collect. The function will return after collecting the specified number of Events. Set to zero to collect an indefinite number of Events.
TimeoutS	-	Specifies the allowed time between Events If the specified time elapses between received Events, the function will return. Set to zero to disable the timeout. Value entered in seconds.
TimeToCollectS	-	Specifies the time to collect Events. The function will return after the specified time has elapsed. Set to zero to collect for an indefinite length of time.
HighSpeedMode	-	Used to select the acquisition mode. False should be entered if the returned event data is to be immediately displayed. True should be entered if large amounts of data are to be collected before being processed by another window/thread or logged to disk.
errorInNoError	-	Accepts a standard LabVIEW error cluster. Data collection is not performed if an error is present.
MessagingEnabled	-	Set to True if the data is to be messaged to another window. Set to False if messaging is not used. If True, the MessagingArray must be configured. When enabled, the Data Interface will call the Windows API function PostMessage(), indicating to the specified window/thread using the specified message that data is available to be processed. The wParam argument of the message will indicate which of the two specified buffers has been filled, and the lParam of the message will indicate the length of the data within that buffer. At the beginning of the data buffer are two 32-bit integers representing the running total counts of events and triggers received respectively. Both values are stored little-endian. The remainder of the buffer contains event data (length = lParam - 4).
MessagingArray	-	Contains the information required for messaging. Element 0 - The handle of the window to be messaged. Element 1 - The message to be sent to the specified window. Element 2 - A pointer to the first of two (A) 1MByte buffers. Element 3 - A pointer to the second of two (B) 1MByte buffers. Element 4 - A pointer to an unsigned 16-bit integer. Acquisition will stop if the referenced value is zero when either a message is sent or an internal timeout is reached.
len	-	Length of MessagingArray[] array.
NumEventsRead	-	Returns the number of events read by the Data Interface.
dupFileRefnum	-	Duplicate file refnum output.
NumEventsReached	-	Boolean output, returns True if the Data Interface returned as a result of reaching the number of events specified by NumEvents.
TimeoutReached	-	Boolean output, returns True if the Data Interface returned as a result of reaching the timeout specified by TimeoutS.
TimeToCollectReached	-	Boolean output, returns True if the Data Interface returned as a result of reaching the time to collect specified by TimeToCollectS.

Vertilon Corporation, 66 Tadmuck Road, Westford, MA 01886 / Tel: (978) 692-7070 / Fax: (978) 692-7010 / www.vertilon.com

ImmediateEventData	-	Returns a portion of the collect Event Data. This output is only guaranteed to be valid when NumEvents is set to 1 and NumEventsReached is True. The value of this output is unspecified when the Data Interface returns due to a timeout or a count larger than 1. To evaluate all data, use file logging or messaging.
len2	-	Length of ImmediateEventData[] array.
ElapsedTimeS	-	Returns the time elapsed while collecting data.
errorOut	-	Points to error information from the function in a standard LabVIEW error cluster.

ErrorHandler:

void __cdecl **ErrorHandler** (TD1 *errorInNoError, LVBoolean *OutputErrorResult, char OutputErrorString[], long len, TD1 *errorOut);

Converts a LabVIEW Error Cluster generated by a PhotoniQ function and returns a Boolean Error Result, and an Error String appropriate for display in a user interface.

errorInNoError	-	Accepts a standard LabVIEW error cluster.
OutputErrorResult	-	True if an error was present, False if no error.
OutputErrorString	-	Contains a description of the error present, blank if no error.
len	-	Length of the OutputErrorString[] array.
errorOut	-	Duplicate error in cluster output.

LVDLLStatus:

MgErr **LVDLLStatus** (CStr errStr, int32 errStrLen, void *module);

All Windows DLLs built from LabVIEW, in addition to the functions you export, contain this exported function. The calling program uses this function to verify that the LabVIEW DLL loaded correctly. If an error occurs while loading the DLL, the function returns the error.

errStr	-	Pass a string buffer to this parameter to receive additional information about the error.
errStrLen	-	Set to the number of bytes in the string buffer passed as errStr.
module	-	to retrieve the handle to the LabVIEW Run-Time Engine being used by the DLL. Typically, this parameter can be set as NULL.

Error Cluster Initialization

The error clusters should be initialized by the user application as shown below:

TD1 errIn = {LVFALSE, 0, NULL};

TD1 errOut = {LVFALSE, 0, NULL};

This initialization will create the equivalent of a "No Error" cluster for use with the DLL functions. The individual functions will update the errOut cluster if an error is detected during the execution of that function.

Vertilon Corporation, 66 Tadmuck Road, Westford, MA 01886 / Tel: (978) 692-7070 / Fax: (978) 692-7010 / www.vertilon.com

Control Interface Commands

The command op codes for the control interface (ControlInterface) are given in the table below.

Opcode	Function Name	Description
0x03	Update PhotoniQ Configuration	Updates the PhotoniQ configuration by writing parameters to the PhotoniQ User Configuration Table. Input Arguments: An unsigned 16-bit number followed by an array of unsigned 16-bit configuration table parameters. A zero as the first argument indicates a write of the configuration table to RAM only, while a one indicates a write to flash memory. Return Arguments: Error returned if necessary
0x04	Read PhotoniQ Configuration	Reads the three sections of the PhotoniQ Configuration Table Input Arguments: Single unsigned 16-bit number. A zero indicates a read of the configuration table from RAM, while a one indicates a read from flash memory. Return Arguments: Array of unsigned 16-bit configuration table parameters.
0x06	Read ADCs	Performs a read of the ADCs on the PhotoniQ. Input Arguments: None. Return Arguments: Results of eight ADC reads in an array of unsigned 16-bit values in the following order: HV1 monitor, HV2 monitor, SIB HV Monitor, +3.3VA, +5V UF, DCRD AIN1, DCRD AIN0, ADC Spare To convert codes to volts: (Codes/4096)* scale factor. Scale factor = 3 for assembly rev 0 and rev 1, 5 for assembly rev 2.
0x07	Calibrate	Performs a system calibration. Calculates either an offset or background calculation. (Offset calculation not recommended for users) Input Arguments: Three unsigned 16-bit arguments. 0x55, 0xAA, and 1 to indicate offset calculation desired, 2 to indicate background calculation. Return Arguments: Error if necessary.
0x09	Report Update	Increments the number of reports that the PC can accept. Input Arguments:0x55, 0xAA, and the increment to the number of reports allowed. Return Arguments: None, this opcode does not generate a response.
0x0B	System Mode	Changes the system mode from acquire to standby, or standby to acquire. Input Arguments: 0x55, 0xAA, and the new system mode (0 = standby, 1 = acquire) Return Arguments: Error if necessary.
0xAA	Re-boot for FW Update	Reboots the DSP and determines if system should enter the main code or PROM Burn code. Used for a system firmware update and available when running the main code or the PROM Burn code. Input Arguments: 0x55, 0xAA, and 1 to enter PROM Burn code, 0 to enter Main program code. Return Arguments: Error if necessary.

Vertilon Corporation, 66 Tadmuck Road, Westford, MA 01886 / Tel: (978) 692-7070 / Fax: (978) 692-7010 / www.vertilon.com

Opcode	Function Name	Description
0xBB	Erase System Code (PROM Burn)	Erases current DSP or FPGA system code. Available only when running the PROM Burn code. Input Arguments: 0x55, 0xAA and 0xF0 for FPGA code, 0x0F for DSP code. Return Arguments: Error if necessary.
0xCC	Program System Code (PROM Burn)	Programs one line of DSP or FPGA system code. Available only when running the PROM Burn code. Input Arguments: 0x55, 0xAA, 0xF0 (FPGA code) or 0x0F (DSP code), Line from an Intel Hex-32 formatted programming file. Return Arguments: Error if necessary.

Table 12: Control Interface Commands

Vertilon Corporation, 66 Tadmuck Road, Westford, MA 01886 / Tel: (978) 692-7070 / Fax: (978) 692-7010 / www.vertilon.com

Low Level USB Interface Description

A description of the low level interface to the PhotoniQ using the USB port is provided for programmers who wish to write their own set of DLLs or drivers. The sections below summarize the details of the interface.

USB Device Defaults

Value	Details
USB Compatibility	USB 2.0 (High-speed)
Vendor ID	0x0925
Product ID	0x0480
Device ID	0x0000
Class	Human Interface Device (HID, 1.1)
Indexed String 1	"Vertilon"
Indexed String 2	"PhotoniQ"
Indexed String 3	"High" (when connected to high-speed host) "Full" (when connected to full-speed host)
Indexed String 4	"06032801"

Table 13: USB Device Details

HID Implementation

The PhotoniQ implements the reports listed below for communication. Report IDs 0x01, and 0x11 (Feature, Input, and Output) are used to send commands to the PhotoniQ and receive responses. Report ID 0x22 (Input only) is used to transfer event data from the PhotoniQ to the host. The opcodes that can be used with each report type are also listed.

Report ID	Type	Length (Bytes)	Opcodes (Hex)
0x01	Feature	63	00AA
0x11	Output	63	0003, 0004, 0006, 0007, 0009, 000B, 00BB, 00CC
0x11	Input	63	0003, 0004, 0006, 0007, 0009, 000B, 00BB, 00CC
0x22	Input	4095	0099

Table 14: HID Report Descriptions

Report Format (IDs 0x01 and 0x11)

The commands sent to the PhotoniQ using report IDs 0x01 and 0x11 must have the format specified in the following table. Note that indices here are specified for shortword data.

Index	Value
0	Report ID – MSByte must be 0x00
1:3	Fixed Start Codon – ASCII string "CMD"
4	Opcode
5	Length – Number of data words
6:(Length+5)	Data
Length+6	Checksum – Sum of all values including checksum equals zero.

Table 15: Report Format (IDs 0x01 and 0x11)

Responses to commands are returned using the same report ID. Responses have a minimum Length value of 1, so that each response can return an error indicator in the first data location (1 – No Error, 0 – Error). If an error is present, another data word is added to the report in the second data location indicating the specific error. A list of error codes is provided below.

Code	Name	Description
0x01	Erase Failed	DSP or FPGA erase operation failed.
0x02	Program Failed	DSP or FPGA program operation failed.
0x77	Configuration ID mismatch	Factory configuration ID does not match user value.
0x88	Communication Timeout	A control transfer timeout occurred resulting in an incomplete packet.
0xAA	Invalid Argument	Argument is out of allowed range. Returns an additional data value containing the index of the offending argument.
0xAB	EEPROM Error	USB erase or program operation failed.
0xAC	EEPROM Bus Busy	USB erase or program operation failed.
0xBB	Invalid Number of Arguments	System received an unexpected number of arguments for a given command.
0xCC	Invalid Command	System received an unknown command opcode.
0xDD	Invalid Length	Receive data length does not match expected total length.
0xEE	Invalid Start Codon	System received an invalid start sequence ("CMD").
0xFF	Invalid Checksum	System received an invalid checksum from the host.

Table 16: Report Error Codes

Report Format (ID 0x22)

The event data sent from the PhotoniQ using report ID 0x22 will have the format specified in the following table. Note that indices here are specified for shortword data. Note that an HID class driver will remove the Report ID before returning any data, and indices should be adjusted accordingly.

Index	Value
0	Report ID – MSByte must be 0x00
1:3	Fixed Start Codon – ASCII string “DAT”
4	Opcode – 0x0099
5	Length – Number of data words
6	Number of Events in Report
7	Words per Event
8	Number of Remaining Available Reports
9	Trigger Count (L)
10	Trigger Count (H)
11:(Length+10)	Data
Length+11	Checksum – Sum of all values including checksum equals zero.

Table 17: Report Format (ID 0x22)

Vertilon Corporation, 66 Tadmuck Road, Westford, MA 01886 / Tel: (978) 692-7070 / Fax: (978) 692-7010 / www.vertilon.com

Vertilon Corporation has made every attempt to ensure that the information in this document is accurate and complete. Vertilon assumes no liability for errors or for any incidental, consequential, indirect, or special damages including, without limitation, loss of use, loss or alteration of data, delays, lost profits or savings, arising from the use of this document or the product which it accompanies.

Vertilon reserves the right to change this product without prior notice. No responsibility is assumed by Vertilon for any infringements of patents or other rights of third parties which may result from its use. No license is granted by implication or otherwise under the patent and proprietary information rights of Vertilon Corporation.

© 2012 Vertilon Corporation, ALL RIGHTS RESERVED

UM6180.1.1 Feb 2012

Vertilon Corporation, 66 Tadmuck Road, Westford, MA 01886 / Tel: (978) 692-7070 / Fax: (978) 692-7010 / www.vertilon.com